Алматы (7273)495-231
Ангарск (3955)60-70-56
Архангельск (8182)63-90-72
Астрахань (8512)99-46-04
Барнаул (3852)73-04-60
Белгород (4722)40-23-64
Благовещенск (4162)22-76-07
Брянск (4832)59-03-52
Владивосток (423)249-28-31
Владикавказ (8672)28-90-48
Владимир (4922)49-43-18
Волгоград (844)278-03-48
Вологда (8172)26-41-59
Воронеж (473)204-51-73
Екатеринбург (343)384-55-89
Иваново (4932)77-34-06
Ижевск (3412)26-03-58
Иркутск (395)279-98-46
Казань (843)206-01-48
Калининград (4012)72-03-81
Калуга (4842)92-23-67
Кемерово (3842)65-04-62
Киров (8332)68-02-04
Коломна (4966)23-41-49
Кострома (4942)77-07-48
Краснодар (861)203-40-90
Красноярск (391)204-63-61
Курск (4712)77-13-04
Курган (3522)50-90-47
Липецк (4742)52-20-81
Магнитогорск (3519)55-03-13
Москва (495)268-04-70
Мурманск (8152)59-64-93
Набережные Челны (8552)20-53-41
Нижний Новгород (831)429-08-12
Новокузнецк (3843)20-46-81
Ноябрьск (3496)41-32-12
Новосибирск (383)227-86-73
Омск (3812)21-46-40
Орел (4862)44-53-42
Оренбург (3532)37-68-04
Пенза (8412)22-31-16
Петрозаводск (8142)55-98-37
Псков (8112)59-10-37
Пермь (342)205-81-47
Ростов-на-Дону (863)308-18-15
Рязань (4912)46-61-64
Самара (846)206-03-16
Саранск (8342)22-96-24
Санкт-Петербург (812)309-46-40
Саратов (845)249-38-78
Севастополь (8692)22-31-93
Симферополь (3652)67-13-56
Смоленск (4812)29-41-54
Сочи (862)225-72-31
Ставрополь (8652)20-65-13
Сургут (3462)77-98-35
Сыктывкар (8212)25-95-17
Тамбов (4752)50-40-97
Тверь (4822)63-31-35
Тольятти (8482)63-91-07
Томск (3822)98-41-53
Тула (4872)33-79-87
Тюмень (3452)66-21-18
Ульяновск (8422)24-23-59
Улан-Удэ (3012)59-97-51
Уфа (347)229-48-12
Хабаровск (4212)92-98-04
Чебоксары (8352)28-53-07
Челябинск (351)202-03-61
Череповец (8202)49-02-64
Чита (3022)38-34-83
Якутск (4112)23-90-97
Ярославль (4852)69-52-93

Россия +7(495)268-04-70
Казахстан +7(7172)727-132
Киргизия +996(312)96-26-47

www.norgren.nt-rt.ru || ner@nt-rt.ru

Технические характеристики на клапаны плавного пуска Excelon Pro, Excelon, Excelon Plus, Olympian Plus компании IMI NORGREN

Port size: 3/4" ... 1 1/2" (ISO G/PTF)

Assists machine designers in complying with the European Machineries Directive

Can help existing machinery to comply with PUWER (Provision and Use of Work Equipment Regulations)

Controlled increase of downstream pressure on start up

Solenoid, air pilot or manual operator

High forward flow capacity

High flow dump facility

Technical features

Medium:
Compressed air only
Operating pressure:
3 bar (43 psi) minimum
Solenoid actuated:
10 bar (145 psi) maximum
Pilot actuated:
17 bar (246 psi) maximum
Snap pressure:
Full flow when downstream pressure reaches 50 ... 80% of inlet pressure
Charge time:
For 25 litre (845 fluid oz) downstream volume and 6,3 bar (90 psi) inlet pressure 6,4 sec. minimum 115 sec. maximum

Flow:
147 dm^3/s (312 scfm)
(P1 » P2 = Cv 11,2)
(P2 » P3 = Cv >11)
Operating pressure: 6,3 bar (91 psi)
Δp: 0,5 bar (7 psi)
Port sizes:
3/4", 1", 1 1/4" or 1 1/2"
Air pilot port:
G1/4 with ISO G main ports
1/4 PTF with PTF main ports
Exhaust port:
G1 with ISO G main ports
1" PTF with PTF main ports

Standard compliances:
II 2G Ex h IIC T6 Gb
II 2D Ex h IIIC T85° Db
Ambient/Media temperature:
Solenoid actuated:
-20° ... +50°C (-4 ... +149°F)
Pilot actuated:
-20° ... +80°C (-4 ... +176°F)

Materials:
Body, yoke, top and bottom plate: Aluminium
Filter discs: Sintered plastic
Internal components: Brass/steel
Elastomers: NBR

Electrical details for solenoid operators

Voltage tolerance	± 10%
Rating	100% continuous duty
Inlet orifice	1,0 mm
Electrical connection	Industrial Standard, 22 mm
Solenoid coil mounting	Four positions x 90°
Protection class	IP 65 (with sealed plug)

Technical data - standard models

Symbol	Port size	Size	Actuation/return	Voltage	Pilot port	Weight (kg)	Typ
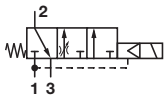	G3/4	—	Solenoid/spring	24 V d.c.	—	2,95	P68F-6GC-PFA *1)
	G1	—	Solenoid/spring	24 V d.c.	—	2,93	P68F-8GC-PFA *1)
	G1 1/4	Basic	Solenoid/spring	24 V d.c.	—	2,90	P68F-AGC-PFA *1)
	G1 1/2	—	Solenoid/spring	24 V d.c.	—	2,92	P68F-BGC-PFA *1)
	Without yoke		Solenoid/spring	24 V d.c.	—		P68F-BGC-PFA *1)
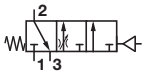	G3/4	—	Air/spring	—	1/4"	2,77	P68F-6GA-NNN
	G1	—	Air/spring	—	1/4	2,75	P68F-8GA-NNN
	G1 1/4	Basic	Air/spring	—	1/4	2,72	P68F-AGA-NNN
	G1 1/2	—	Air/spring	—	1/4	2,74	P68F-BGA-NNN
	Without yoke		Air/spring	—	1/4		P68F-NNA-NNN

*1) To select other solenoid type and coil voltage refer to option selector on page 2

Our policy is one of continued research and development. We therefore reserve the right to amend, without notice, the specifications given in this document. (2002 - 8097h) © 2015 IMI International s.r.o.

Voltage codes and spare coils

22 mm coil for connector interface acc. to industrial standard

Voltage	Power Inrush/Hold	Model	Code
12 V d.c.	2 W	QM/48/12J/21	12J
24 V d.c	2 W	QM/48/13J/21	13J
110/120 V 50/60 Hz	4/2,5 VA	QM/48/18J/21	18J
220/240 V 50/60 Hz	6/5,0 VA	QM/48/19J/21	19J

Connector plugs

Industrial standard 22 mm 2-pole + PE

0657868

Option selector

P68F-★★★-★★★

Port size	Substitute
3/4"	6
1"	8
1 1/4"	A
1 1/2"	B
Without yoke	N

Threads	Substitute
PTF	A
ISO G parallel (standard)	G
No yoke (standard)	N

Operator	Substitute
Air pilot (standard)	A
Air pilot with manual lockout	B
22 mm solenoid (standard)	C
22 mm solenoid with manual lockout	D

Connector	Substitute
3 pin plug with cable gland	A
Without	N

Voltage	Watts	Substitute
24 V d.c.	2 W	F
220/240 V, 50/60 Hz	4/2,5 VA	B
110/120 V, 50/60 Hz	4/2,5 VA	A
No coil	–	Z
No solenoid	–	N

Manual override	Substitute
Non-locking, shrouded push button	P
None	N

Flow characteristics

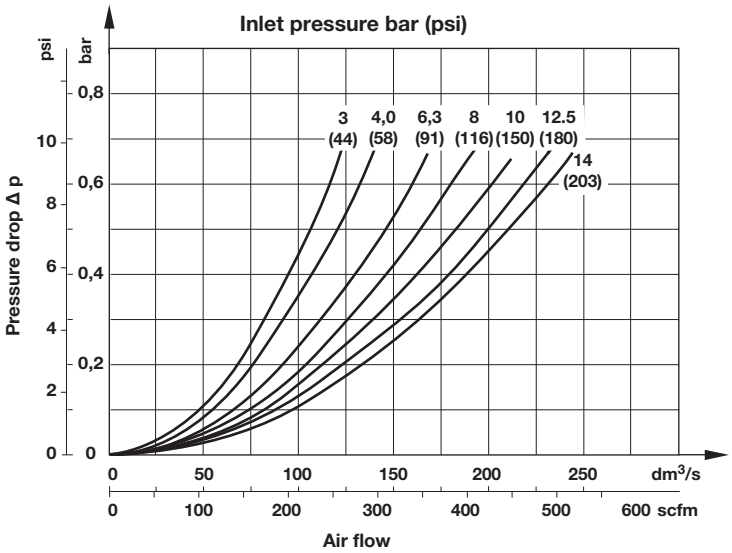

Our policy is one of continued research and development. We therefore reserve the right to amend, without notice, the specifications given in this document. (2002 - 8097h) © 2015 IMI International s.r.o.

Maximum charge time

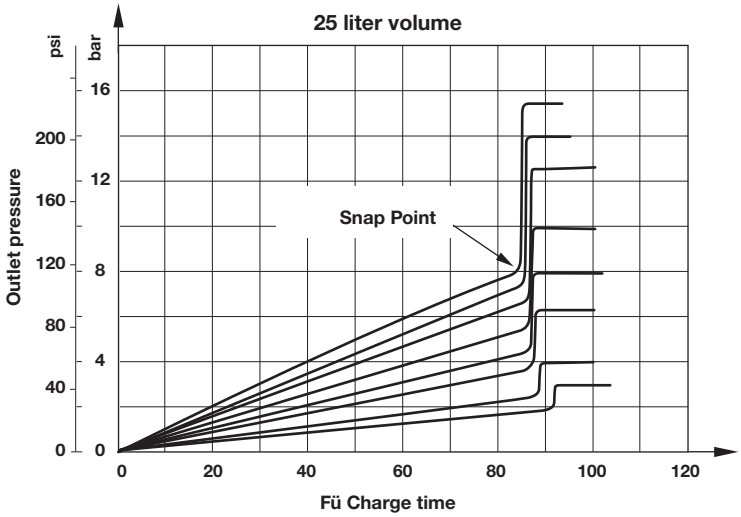

Accessories

Thread	Single yoke	Double yoke	End connector kit	Single yoke non threads	3/2 Shut-off valve Threaded inlet only
G3/4	Y68A-6GN-N1N	Y68A-6GN-N2N	5524-55	74785-98	T68H-6GB-B2N
G1	Y68A-8GN-N1N	Y68A-8GN-N2N	5524-52		T68H-8GB-B2N
G1 1/4	Y68A-AGN-N1N	Y68A-AGN-N2N	5523-52		T68H-AGB-B2N
G1 1/2	Y68A-BGN-N1N	Y68A-BGN-N2N	5523-93		T68H-BGB-B2N
3/4 PTF	Y68A-6AN-N1N	Y68A-6AN-N2N	5524-53		T68H-6AB-B2N
1 PTF	Y68A-8AN-N1N	Y68A-8AN-N2N	5524-50		T68H-8AB-B2N
1 1/4 PTF	Y68A-AAN-N1N	Y68A-AAN-N2N	5523-50		T68H-AAB-B2N
1 1/2 PTF	Y68A-BAN-N1N	Y68A-BAN-N2N	5523-95		T68H-BAB-B2N

Thread	3/2 Shut-off valve Threaded outlet only	Bracket mounting	Nut	Silencer	Porting block
G3/4	T68H-6GC-B2N	18-001-979	5520-89	MB008B (R1)	18-026-986 (G1/4 & G1/2)
G1	T68H-8GC-B2N	18-001-979		MB008A (1 PTF)	18-026-983 (1/4 & 1/2 PTF)
G1 1/4	T68H-AGC-B2N	18-001-978			
G1 1/2	T68H-BGC-B2N	18-001-972			
3/4 PTF	T68H-6AC-B2N	18-001-979			
1 PTF	T68H-8AC-B2N	18-001-979			
1 1/4 PTF	T68H-AAC-B2N	18-001-978			
1 1/2 PTF	T68H-BAC-B2N	18-001-972			

Our policy is one of continued research and development. We therefore reserve the right to amend, without notice, the specifications given in this document. (2002 - 8097h) © 2015 IMI International s.r.o.

Dimensions

Dimensions in mm
Projection/First angle

Pilot actuated
Standard

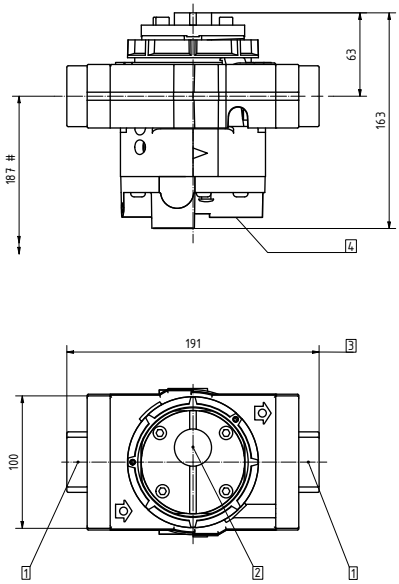

With manual lockout

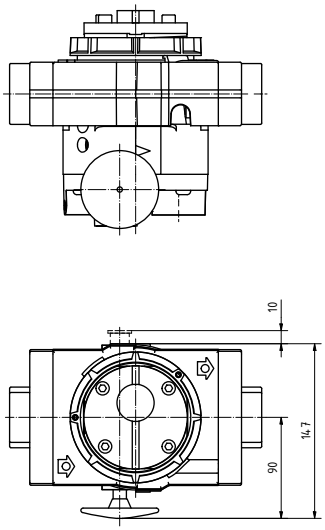

Solenoid actuated
Standard

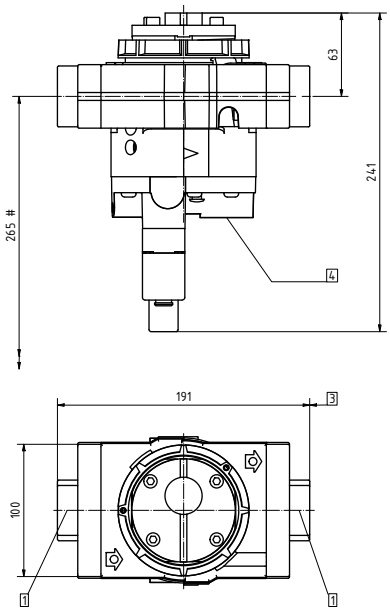

With manual lockout

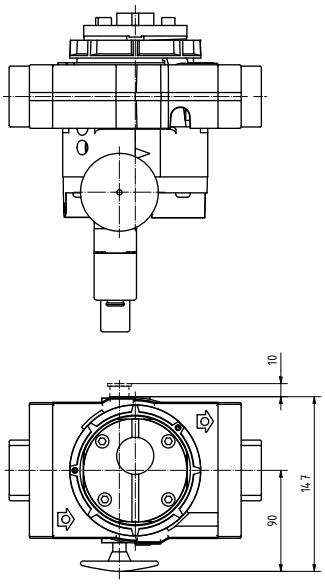

Minimum clearance required to remove unit from yoke
1 Main ports 3/4", 1", 1 1/4" or 1 1/2"
2 Pilot port 1/4"
3 Plus 10 mm for ports 1 1/4" or 1 1/2"
4 Exhaust port 1"

Our policy is one of continued research and development. We therefore reserve the right to amend, without notice, the specifications given in this document. (2002 - 8097h) © 2015 IMI International s.r.o.

Single yoke with bracket

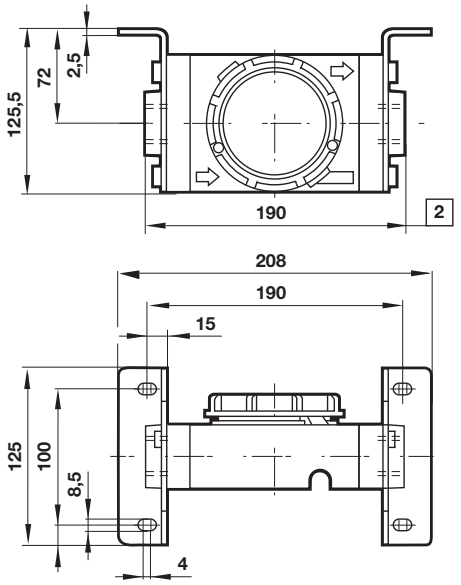

1 For 1 1/4" and 1 1/2" ported yokes add 10 mm

Double yoke with bracket

Dimensions in mm
Projection/First angle

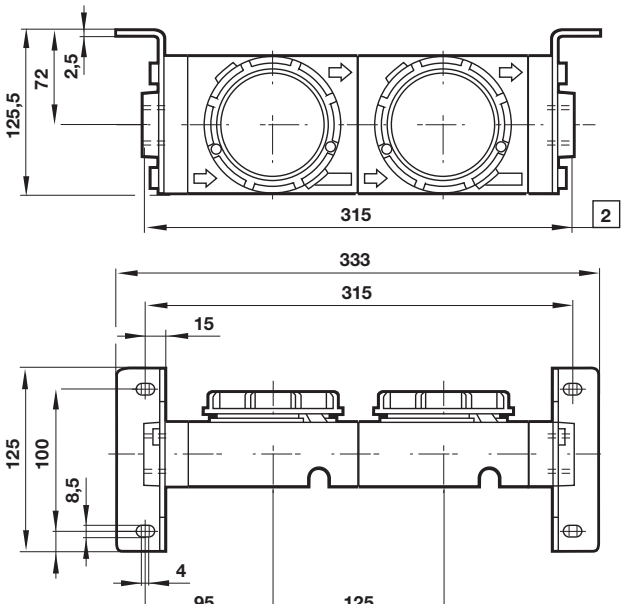

1 For 1 1/4" and 1 1/2" ported yokes add 10 mm

3/2 Shut-off valve

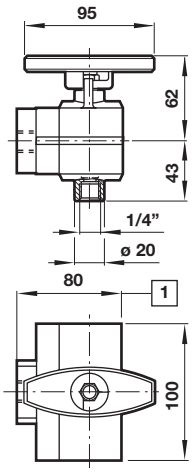

1 For 1 1/2" ported yokes add 5 mm

Porting block

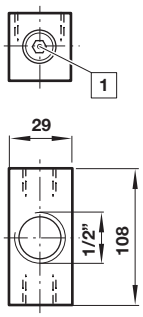

1 Two additional plugged G1/4 ports

Silencer

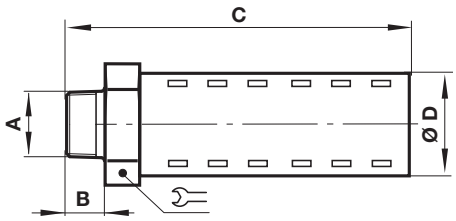

A	B	C	D		Typ
R1	23	138	51	51	MB008B
1 PTF	23	138	51	51	MB008A

Warning

These products are intended for use in industrial compressed air systems only. Do not use these products where pressures and temperatures can exceed those listed under »**Technical features/data**«.
Before using these products with fluids other than those specified, for non-industrial applications, life-support systems or other applications not within published specifications, consult
IMI Precision Engineering, IMI International s.r.o.

Through misuse, age, or malfunction, components used in fluid power systems can fail in various modes. The system designer is warned to consider the failure modes of all component parts used in fluid power systems and to provide adequate safeguards to prevent personal injury or damage to equipment in the event of such failure.
System designers must provide a warning to end users in the system instructional manual if protection against a failure mode cannot be adequately provided.
System designers and end users are cautioned to review specific warnings found in instruction sheets packed and shipped with these products.

Our policy is one of continued research and development. We therefore reserve the right to amend, without notice, the specifications given in this document. (2002 - 8097h) © 2015 IMI International s.r.o.

P64S - Olympian Plus plug-in system
Soft start monitored dump valves

- **Port size: 1/4" & 3/4" (ISO G/PTF)**
- **Olympian Plus plug in design or controlled increase of downstream pressure on start up**
- **The positively driven micro switch ensures a monitored dump function**
- **High forward flow and dump facility**

Technical features

Medium:
Compressed air only
Operating pressure:
3 bar (43 psi) minimum
10 bar (145 psi) maximum
Snap pressure:
Full flow when downstream pressure reaches 35 ... 60% of inlet pressure
Charge time:
For 2 litre downstream volume and 6,3 bar (90 psi) inlet pressure
0,2 sec. minimum
75 sec. maximum

Flow:
See diagram on page 2
Port sizes:
1/4", 3/8", 1/2" or 3/4"
Exhaust port:
G1/2 with ISO G main ports
1/2" PTF with PTF main ports
Gauge Ports:
Rc1/8
Ambient/Media temperature:
0 ... +50°C (+32 ... +122°F)
Air supply must be dry enough to avoid ice formation at temperatures below +2°C (+35°F).

Note: Soft start valves never shut off completely, and must be installed downstream of a directional control valve such as a Norgren Poppet or Lockout Valve.

Materials:
Body: Zinc alloy
Intermediate body: Aluminium
Filter discs: Sintered plastic
Internal components:
Brass; steel or stainless steel
Top plate: Aluminium
Exhaust Bonnet: Zinc alloy
Yoke: Zinc alloy
Elastomers: NBR

Electrical details for solenoid operators

Voltage tolerance	± 10%
Rating	100% continuous duty
Inlet orifice	1,0 mm
Electrical connection	Industrial Standard, 22 mm
Solenoid coil mounting	Four positions x 90°
Protection class	IP 65 (with sealed plug)

Electrical details for monitoring switch

Voltage	240 V a.c.
Current	1,5 A
Connection cable	Harmonised CENELEC 5 x 0,75 mm²
Cable length	2 m
Protection class	IP 66

Switch details
All electrical connections to be made by a competent licensed electrician
Break - before – Make contact
Normally Open/Normally Closed

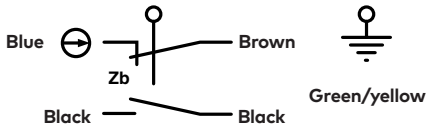

Technical data - standard models

Symbol	Port size	Size	Actuation/ return	Voltage	Weight (kg)	Typ *1)
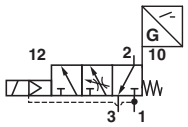	G1/4	—	Solenoid/spring	24 V d.c.	~ 2,3	P64S-2GC-N1N
	G3/8	—	Solenoid/spring	24 V d.c.	~ 2,3	P64S-3GC-N1N
	G1/2	Basic	Solenoid/spring	24 V d.c.	~ 2,3	P64S-4GC-N1N
	G3/4	—	Solenoid/spring	24 V d.c.	~ 2,3	P64S-6GC-N1N
	Without yoke		Solenoid/spring	24 V d.c.	~ 1,8	P64S-NNC-N1N

*1) Units with PTF threads on main port therefore substitute 'G' at the 7th digit changed into 'A'

Our policy is one of continued research and development. We therefore reserve the right to amend, without notice, the specifications given in this document. (2007 - 8084e) © 2015 IMI International s.r.o.

Voltage codes and spare coils

22 mm coil for connector interface acc. to industrial standard

	Voltage	Power Inrush/Hold	Model	Code
	24 V d.c	2 W	QM/48/13J/21	13J

Connector plugs

Industrial standard
22 mm 2-pole + PE

0657868

Flow characteristics

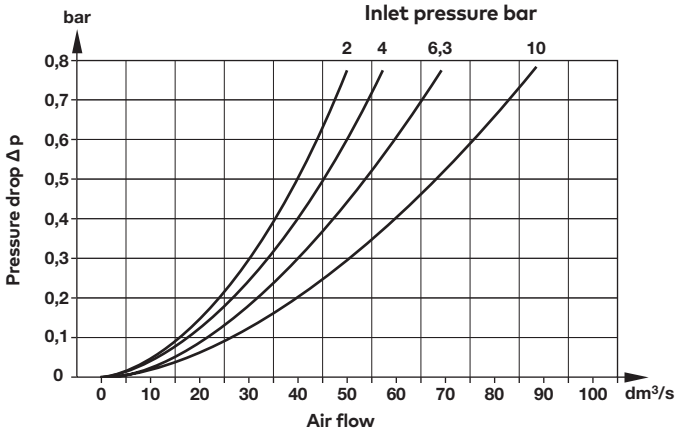

Maximum charge time

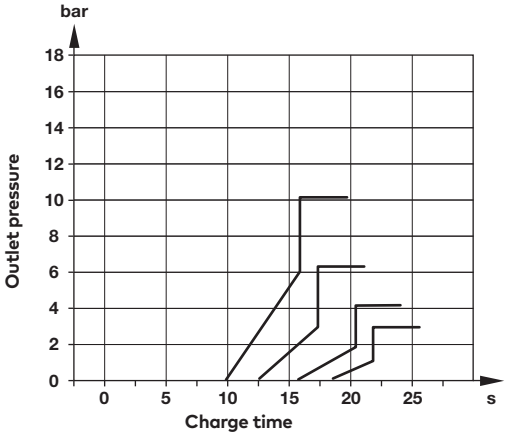

Our policy is one of continued research and development. We therefore reserve the right to amend, without notice, the specifications given in this document. (2007 - 8084e) © 2015 IMI International s.r.o.

Accessories

Thread	Models with G-thread Single yoke	Double yoke 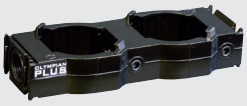	3/2 Shut-off valve Threaded inlet only	Threaded outlet only	End connector kit	Rear entry bracket kit
G1/4	Y64A-2GA-N1N	Y64A-2GA-N2N	T64T-2GB-P1N	T64T-2GC-P1N	–	–
G3/8	Y64A-3GA-N1N	Y64A-3GA-N2N	T64T-3GB-P1N	T64T-3GC-P1N	–	–
G1/2	Y64A-4GA-N1N	Y64A-4GA-N2N	T64T-4GB-P1N	T64T-4GC-P1N	74505-50	–
G3/4	Y64A-6GA-N1N*	Y64A-6GA-N2N*	T64T-6GB-P1N	T64T-6GC-P1N	74505-53	18-026-981
1/4 PTF	Y64A-2AA-N1N	Y64A-2AA-N2N	T64T-2AB-P1N	T64T-2AC-P1N	–	–
3/8 PTF	Y64A-3AA-N1N	Y64A-3AA-N2N	T64T-3AB-P1N	T64T-3AC-P1N	–	–
1/2 PTF	Y64A-4AA-N1N	Y64A-4AA-N2N	T64T-4AB-P1N	T64T-4AC-P1N	74505-52	–
3/4 PTF	Y64A-6AA-N1N*	Y64A-6AA-N2N*	T64T-6AB-P1N	T64T-6AC-P1N	74505-55	–

*These yokes are supplied with two end connenctor kits as standard.

Bracket mounting	Nut	Silencer	Yoke connector kit	Porting block	Padlock with two keys
74504-50	74502-89	MB004B (R1/2)	74503-51	74507-50	0613633 (brass)
		MB004A (1/2 NPT)			

Gauges

Center back connection, white face (full technical specification see datasheet 8.900.900)

Pressure range bar *1	MPa	psi	Ø	Thread size	Model
0 ... 10	0 ... 1	0 ... 145	50 mm	R1/8	18-015-013
0 ... 25	0 ... 2,5	0 ... 362	50 mm	R1/8	18-015-014

*1) primary scale

Center back connection, black face for North America (full technical specification see datasheet 8.900.900)

Pressure range psig *1	bar	MPa	Ø	Thread size	Model
0 ... 160	0 ... 11	0 ... 1.1	2" (50 mm)	1/8 NPT	18-015-204
0 ... 400	0 ... 28	0 ... 2.8	2" (50 mm)	1/8 NPT	18-015-206

*1) primary scale

Our policy is one of continued research and development. We therefore reserve the right to amend, without notice, the specifications given in this document. (2007 - 8084e) © 2015 IMI International s.r.o.

Basic dimensions

Dimensions in mm
Projection/First angle

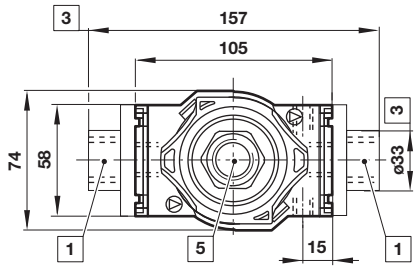

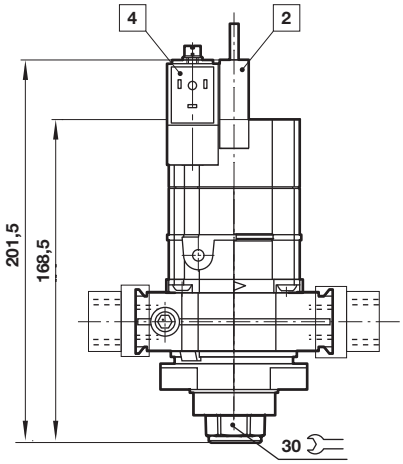

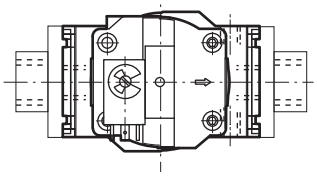

1 Main ports 1/4", 3/8", 1/2" or 3/4"
2 Monitored switch
3 For main ports 3/4" only
4 Solenoid
5 Exhaust port 1/2"

Single yoke with bracket mounting

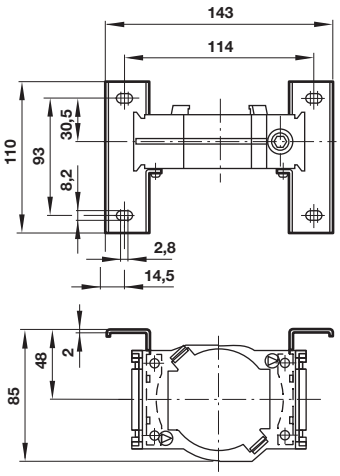

Double yoke with bracket mounting

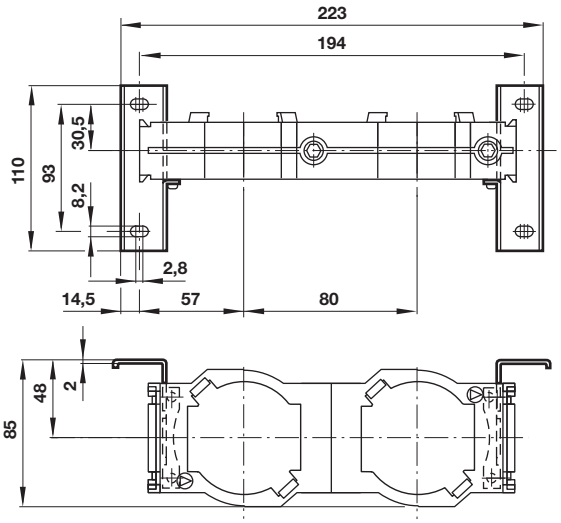

Our policy is one of continued research and development. We therefore reserve the right to amend, without notice, the specifications given in this document. (2007 - 8084e) © 2015 IMI International s.r.o.

Rear entry bracket
18-026-981

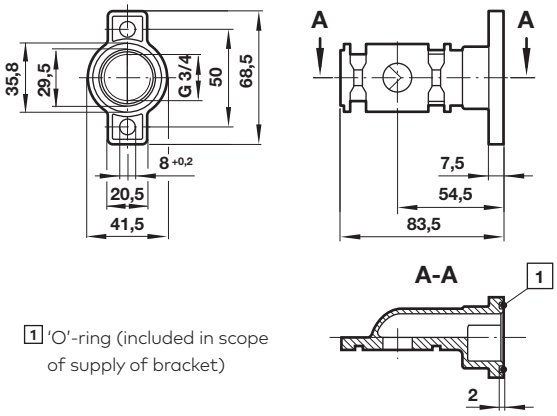

1 'O'-ring (included in scope of supply of bracket)

Porting block
74507-50

Dimensions in mm
Projection/First angle

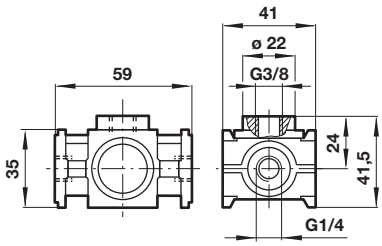

3/2 Shut-off valve

Symbol	A	B	ø C	Model
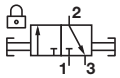	G1/4	48	27	T64T-2G*-P1N
	G3/8	48	27	T64T-3G*-P1N
	G1/2	48	27	T64T-4G*-P1N
	G3/4	51	33	T64T-6G*-P1N

* B = Threaded inlet only, C = Threaded outlet only

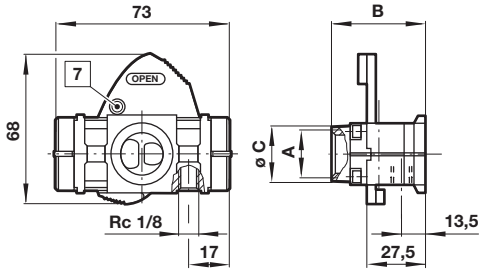

7 Padlock hole ø7,5 mm

Silencer

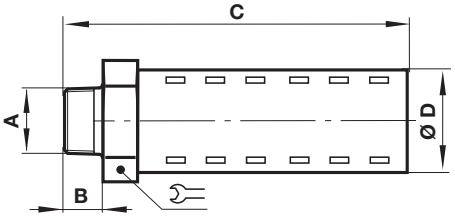

A	B	C	D		Model
R1/2	17	92	32	32	MB004B
1/2 NPT	17	92	32	32	MB004A

Warning

These products are intended for use in industrial compressed air systems only. Do not use these products where pressures and temperatures can exceed those listed under **»Technical features/ data«**.
Before using these products with fluids other than those specified, for non-industrial applications, life-support systems or other applications not within published specifications, consult IMI Precision Engineering.
Through misuse, age, or malfunction, components used in fluid power systems can fail in various modes.

The system designer is warned to consider the failure modes of all component parts used in fluid power systems and to provide adequate safeguards to prevent personal injury or damage to equipment in the event of such failure.
System designers must provide a warning to end users in the system instructional manual if protection against a failure mode cannot be adequately provided.
System designers and end users are cautioned to review specific warnings found in instruction sheets packed and shipped with these products.

Our policy is one of continued research and development. We therefore reserve the right to amend, without notice, the specifications given in this document. (2007 - 8084e) © 2015 IMI International s.r.o.

T68 - Olympian Plus plug-in system
Shut-off & Lockout valves

- **Port size: 3/4" ... 1 1/2" (ISO G/PTF)**
- **Olympian Plus plug in design**
- **Valves can be locked in open or closed position**
- **Use upstream or downstream of air processing units**

Technical features

Medium:
Compressed air only
Maximum operating pressure:
17 bar (246 psi)

Port sizes:
3/4", 1", 1 1/4" or 1 1/2"
Cv factor:
IN to OUT port: 27,5
OUT to EXHAUST port: 0,16

Standard compliances:
II 2G Ex h IIC T6 Gb
II 2D Ex h IIIC T85° Db
Ambient/Media temperature:
-20° ... +80°C (-4 ... +176°F)
Air supply must be dry enough to avoid ice formation at temperatures below +2°C (+35°F).

Materials:
Body: Aluminium
Handle: Zinc alloy
Ball: Brass
Seals: NBR

Technical data - standard models

Symbol	Port size	Size	Exhaust port	Weight (kg)	Model
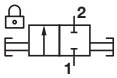	G3/4	–	–	1,0	T68A-6GB-B2N
	G1	Basic	–	0,96	T68A-8GB-B2N
	G1 1/4	–	–	0,94	T68A-AGB-B2N
	G1 1/2	–	–	0,98	T68A-BGB-B2N
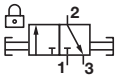	G3/4	–	G1/4	1,0	T68H-6GB-B2N
	G1	Basic	G1/4	0,87	T68H-8GB-B2N
	G1 1/4	–	G1/4	1,0	T68H-AGB-B2N
	G1 1/2	–	G1/4	0,98	T68H-BGB-B2N

Option selector

T68★-★★★- B2N

Type	Substitute
2-Port/2-Position. No exhaust	A
3-Port/2-Position. Threaded exhaust	H

Port size	Substitute
3/4"	6
1"	8
1 1/4"	A
1 1/2"	B

Porting	Substitute
Threaded inlet	B
Threaded outlet	C

Threads	Substitute
PTF	A
ISO G parallel (standard)	G

Our policy is one of continued research and development. We therefore reserve the right to amend, without notice, the specifications given in this document. (2000 - 8096e) © 2015 Norgren GmbH

Silencer
(T68H only)

T40B2800

Dimensions

Dimensions in mm
Projection/First angle

Threaded

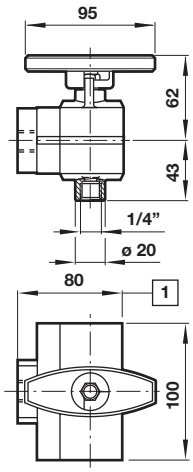

No exhaust

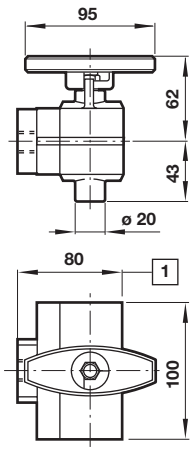

Silencer

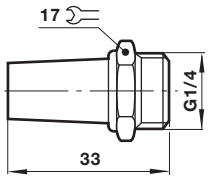

1 For 1 1/2" ported yokes add 5 mm

Warning

These products are intended for use in industrial compressed air systems only. Do not use these products where pressures and temperatures can exceed those listed under **»Technical features/ data«**.
Before using these products with fluids other than those specified, for non-industrial applications, life-support systems or other applications not within published specifications, consult Norgren.
Through misuse, age, or malfunction, components used in fluid power systems can fail in various modes.

The system designer is warned to consider the failure modes of all component parts used in fluid power systems and to provide adequate safeguards to prevent personal injury or damage to equipment in the event of such failure.
System designers must provide a warning to end users in the system instructional manual if protection against a failure mode cannot be adequately provided.
System designers and end users are cautioned to review specific warnings found in instruction sheets packed and shipped with these products.

Our policy is one of continued research and development. We therefore reserve the right to amend, without notice, the specifications given in this document. (2000 - 8096e) © 2015 Norgren GmbH

P64F - Olympian Plus plug-in system
Soft start/dump valves

- **Port size: 1/4" ... 3/4" (ISO G/PTF)**
- **Assists machine designers in complying with the European Machineries Directive**
- **Controlled increase of downstream pressure on start up**
- **Solenoid, air pilot or manual operator**
- **High forward flow and capacity dump facility**

Technical features

Medium:
Compressed air only
Operating pressure:
3 bar (43 psi) minimum
10 bar (145 psi) (Solenoid operated)
17 bar (246 psi) (Pilot operated)
Snap pressure:
Full flow when downstream pressure reaches 50 ... 80% of inlet pressure
Charge time:
For 2 litre downstream volume and 6,3 bar (90 psi) inlet pressure
0,2 sec. minimum
75 sec. maximum
Flow:
57 dm^3/s
Operating pressure: 6,3 bar (91 psi) Δp: 0,5 bar (7 psi)
Port sizes:
1/4", 3/8", 1/2" or 3/4"
Air pilot port:
1/4 PTF with PTF main ports
Rc1/4 with ISO G main ports
Exhaust port:
1/2 PTF with PTF main ports
G1/2 with ISO G main ports
Gauge port:
1/8 PTF with PTF main ports
Rc1/8 with ISO G main ports
Standard compliances:
II 2G Ex h IIC T6 Gb
II 2D Ex h IIIC T85° Db
Ambient/Media temperature:
Solenoid actuated:
-20° ... +50°C (-4° ... +122°F)
Pilot actuated:
-20° ... +80°C (-4° ... +176°F)
Version with gauge:
-20° ... +65°C (-4° ... +149°F)
Air supply must be dry enough to avoid ice formation at temperatures below +2°C (+35°F).
Materials:
Body & yoke: Zinc alloy
Intermediate body: Aluminium
Top plate: Zinc
Elastomers: NBR

Electrical details for solenoid operators

Voltage tolerance	± 10%
Rating	100% continuous duty
Inlet orifice	1,0 mm
Electrical connection	Industrial Standard, 22 mm
Solenoid coil mounting	Four positions x 90°
Protection class	IP 65 (with sealed plug)

Technical data - standard models

Symbol	Port size	Size	Actuation/ return	Voltage	Pilot port	Weight (kg)	Typ
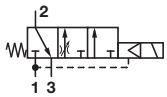	G1/4	–	Solenoid/spring	24 V d.c.	–	2,07	P64F-2GC-PFN *1)
	G3/8	–	Solenoid/spring	24 V d.c.	–	2,05	P64F-3GC-PFN *1)
	G1/2	Basic	Solenoid/spring	24 V d.c.	–	2,02	P64F-4GC-PFN *1)
	G3/4	–	Solenoid/spring	24 V d.c.	–	2,38	P64F-6GC-PFN *1)
	Without yoke		Solenoid/spring	24 V d.c.	–	1,59	P64F-NNC-PFN *1)
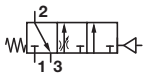	G1/4	–	Air/spring	–	Rc1/4	1,69	P64F-2GA-NNN
	G3/8	–	Air/spring	–	Rc1/4	1,94	P64F-3GA-NNN
	G1/2	Basic	Air/spring	–	Rc1/4	1,91	P64F-4GA-NNN
	G3/4	–	Air/spring	–	Rc1/4	2,27	P64F-6GA-NNN
	Without yoke		Air/spring	–	Rc1/4	1,45	P64F-NNA-NNN

*1) To select other solenoid type and coil voltage refer to option selector on page 2

Our policy is one of continued research and development. We therefore reserve the right to amend, without notice, the specifications given in this document. (2002 - 8083h) © 2015 IMI International s.r.o.

Voltage codes and spare coils

22 mm coil for connector interface acc. to industrial standard

Voltage	Power Inrush/Hold	Model	Code
12 V d.c.	2 W	QM/48/12J/21	12J
24 V d.c	2 W	QM/48/13J/21	13J
110/120 V 50/60 Hz	4/2,5 VA	QM/48/18J/21	18J
220/240 V 50/60 Hz	6/5,0 VA	QM/48/19J/21	19J

Connector plugs

Industrial standard
22 mm 2-pole + PE

0657868

Option selector

P64F-★★★-★★★

Port size	Substitute
1/4"	2
3/8"	3
1/2"	4
3/4"	6
No yoke	N

Threads	Substitute
PTF	A
ISO G parallel (standard)	G
No yoke (standard)	N

Operator	Substitute
Air pilot (standard)	A
Air pilot with manual lockout	B
22 mm solenoid (standard)	C
22 mm solenoid with manual lockout	D

Connector		Substitute
With		A
Without		N
Voltage	**Watts**	**Substitute**
24 V d.c.	2 W	F
12 V d.c.	2 W	E
6 V d.c.	2 W	D
220/240 V, 50/60 Hz	6/5,0 VA	B
110/120 V, 50/60 Hz	4/2,5 VA	A
No coil	–	Z
No solenoid	–	N

Solenoid manual operator	Substitute
Non-locking, shrouded push button	P
None	N

Flow characteristics

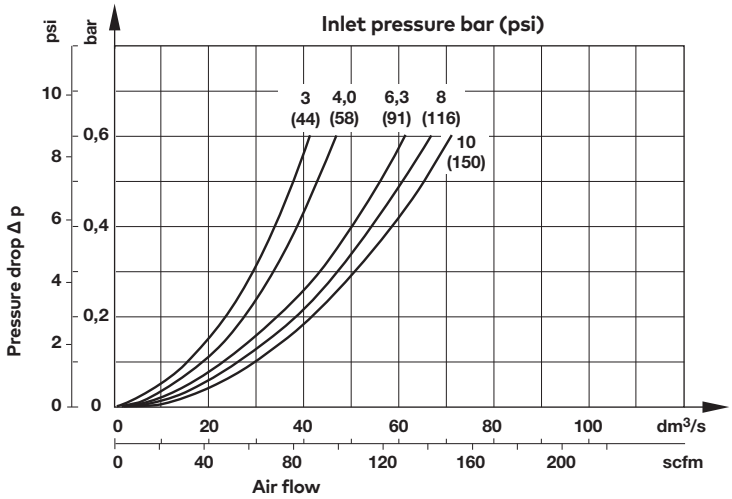

Maximum charge time

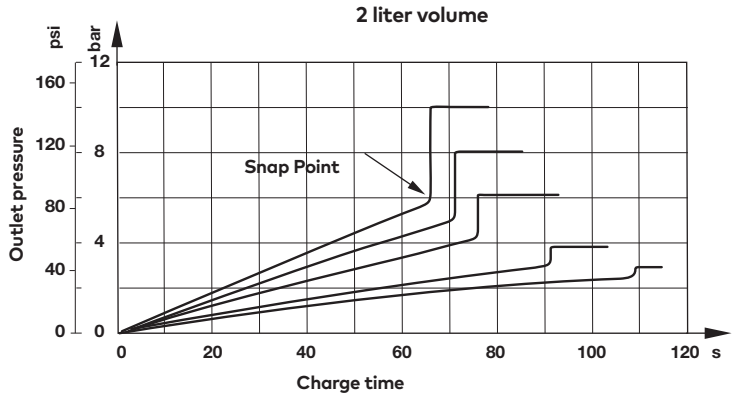

Our policy is one of continued research and development. We therefore reserve the right to amend, without notice, the specifications given in this document. (2002 - 8083h) © 2015 IMI International s.r.o.

Accessories

Thread	Models with G-thread Single yoke	Double yoke 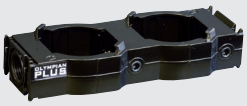	3/2 Shut-off valve Threaded inlet only	Threaded outlet only	End connector kit	Rear entry bracket kit
G1/4	Y64A-2GA-N1N	Y64A-2GA-N2N	T64T-2GB-P1N	T64T-2GC-P1N	–	–
G3/8	Y64A-3GA-N1N	Y64A-3GA-N2N	T64T-3GB-P1N	T64T-3GC-P1N	–	–
G1/2	Y64A-4GA-N1N	Y64A-4GA-N2N	T64T-4GB-P1N	T64T-4GC-P1N	74505-50	–
G3/4	Y64A-6GA-N1N*	Y64A-6GA-N2N*	T64T-6GB-P1N	T64T-6GC-P1N	74505-53	18-026-981
1/4 PTF	Y64A-2AA-N1N	Y64A-2AA-N2N	T64T-2AB-P1N	T64T-2AC-P1N	–	–
3/8 PTF	Y64A-3AA-N1N	Y64A-3AA-N2N	T64T-3AB-P1N	T64T-3AC-P1N	–	–
1/2 PTF	Y64A-4AA-N1N	Y64A-4AA-N2N	T64T-4AB-P1N	T64T-4AC-P1N	74505-52	–
3/4 PTF	Y64A-6AA-N1N*	Y64A-6AA-N2N*	T64T-6AB-P1N	T64T-6AC-P1N	74505-55	–

*These yokes are supplied with two end connenctor kits as standard.

Bracket mounting	Nut	Silencer	Yoke connector kit	Porting block	Padlock with two keys
74504-50	74502-89	MB004B (R1/2)	74503-51	74507-50	0613633 (brass)
		MB004A (1/2 NPT)			

Gauges

Center back connection, white face (full technical specification see datasheet 8.900.900)

6

Pressure range bar *1	MPa	psi	Ø	Thread size	Model
0 ... 10	0 ... 1	0 ... 145	50 mm	R1/8	18-015-013
0 ... 25	0 ... 2,5	0 ... 362	50 mm	R1/8	18-015-014

*1) primary scale

Center back connection, black face for North America (full technical specification see datasheet 8.900.900)

6

Pressure range psig *1	bar	MPa	Ø	Thread size	Model
0 ... 160	0 ... 11	0 ... 1.1	2" (50 mm)	1/8 NPT	18-015-204
0 ... 400	0 ... 28	0 ... 2.8	2" (50 mm)	1/8 NPT	18-015-206

*1) primary scale

Our policy is one of continued research and development. We therefore reserve the right to amend, without notice, the specifications given in this document. (2002 - 8083h) © 2015 IMI International s.r.o.

Dimensions
Pilot actuated
Standard

Dimensions in mm
Projection/First angle

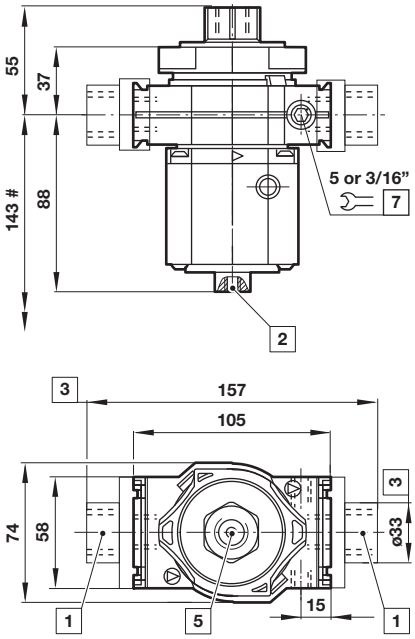

With manual lockout

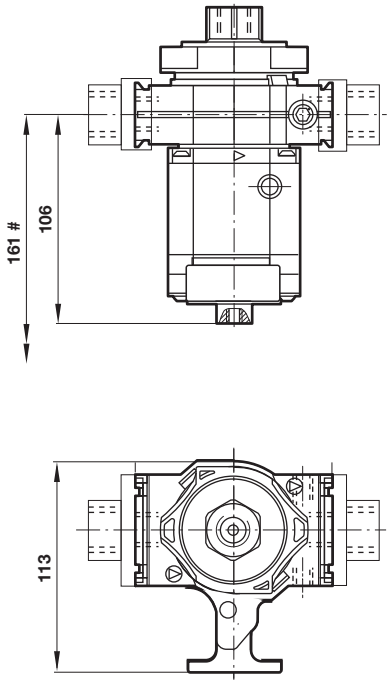

Solenoid actuated
Standard

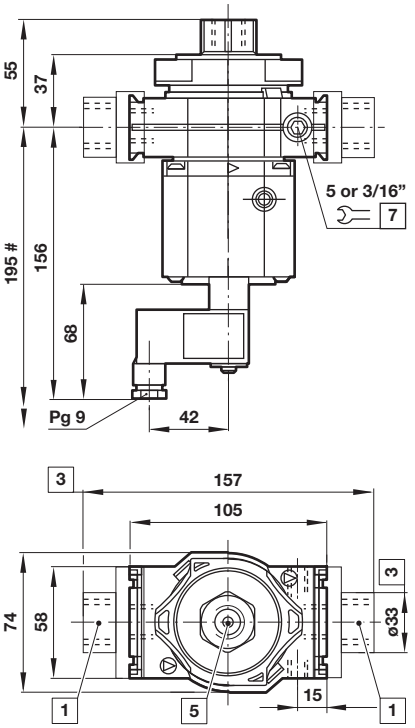

With manual lockout

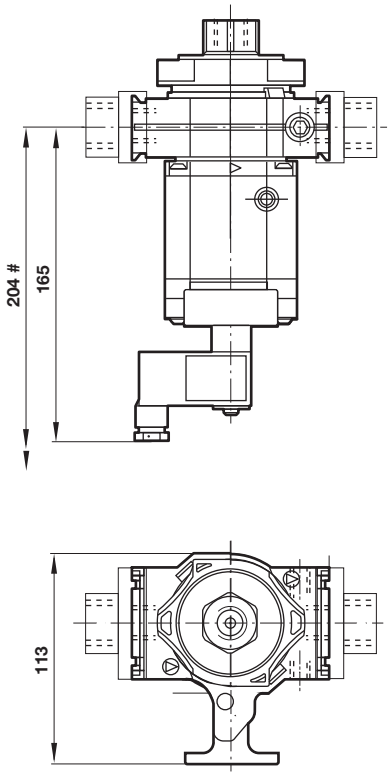

Minimum clearance required to remove unit from yoke
1 Main ports 1/4", 3/8", 1/2" or 3/4"
2 Pilot port Rc1/4
3 For main ports 3/4" only
5 Exhaust port 1/2"
7 Gauge port 1/8"

Our policy is one of continued research and development. We therefore reserve the right to amend, without notice, the specifications given in this document. (2002 - 8083h) © 2015 IMI International s.r.o.

Single yoke with bracket mounting

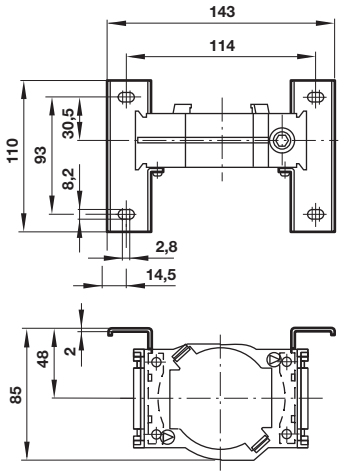

Double yoke with bracket mounting

Dimensions in mm
Projection/First angle

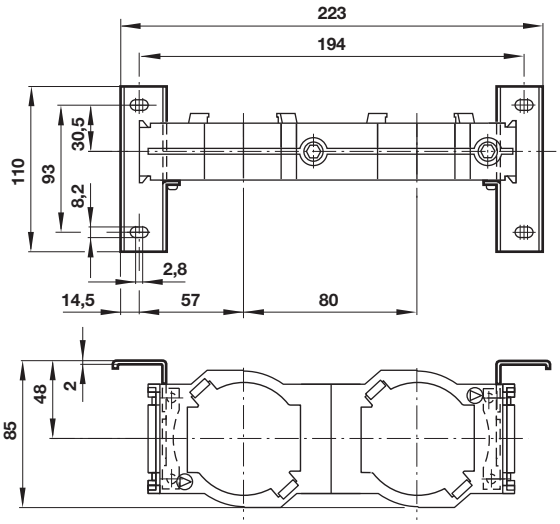

Rear entry bracket 18-026-981

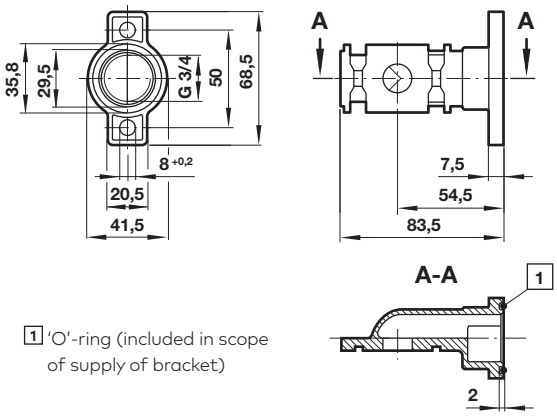

1 'O'-ring (included in scope of supply of bracket)

Porting block 74507-50

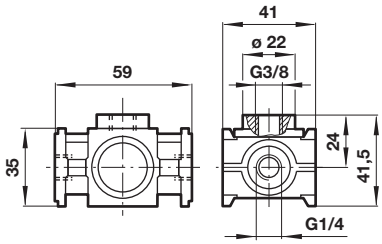

3/2 Shut-off valve

Symbol	A	B	ø C	Model
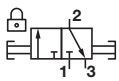	G1/4	48	27	T64T-2G*-P1N
	G3/8	48	27	T64T-3G*-P1N
	G1/2	48	27	T64T-4G*-P1N
	G3/4	51	33	T64T-6G*-P1N

* B = Threaded inlet only, C = Threaded outlet only

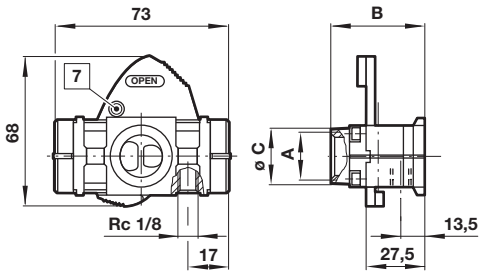

Our policy is one of continued research and development. We therefore reserve the right to amend, without notice, the specifications given in this document. (2002 - 8083h) © 2015 IMI International s.r.o.

Silencer

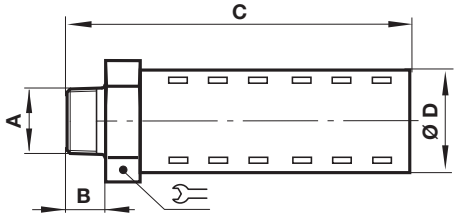

Dimensions in mm
Projection/First angle

A	B	C	D		Model
R1/2	17	92	32	32	MB004B
1/2 NPT	17	92	32	32	MB004A

Warning

These products are intended for use in industrial compressed air systems only. Do not use these products where pressures and temperatures can exceed those listed under **»Technical features/ data«**.
Before using these products with fluids other than those specified, for non-industrial applications, life-support systems or other applications not within published specifications, consult IMI Precision Engineering.
Through misuse, age, or malfunction, components used in fluid power systems can fail in various modes.

The system designer is warned to consider the failure modes of all component parts used in fluid power systems and to provide adequate safeguards to prevent personal injury or damage to equipment in the event of such failure.
System designers must provide a warning to end users in the system instructional manual if protection against a failure mode cannot be adequately provided.
System designers and end users are cautioned to review specific warnings found in instruction sheets packed and shipped with these products.

Our policy is one of continued research and development. We therefore reserve the right to amend, without notice, the specifications given in this document. (2002 - 8083h) © 2015 IMI International s.r.o.

- **Port size: 1/4“ ... 3/4“ (ISO G/PTF)**
- **T64B: 2/2 shut-off valves no exhaust**
- **T64T: 3/2 shut-off valves with 1/8” tapped exhaust**
- **T64E: 3/2 shut-off USA OSHA lockout valves**

Valves can be locked in open or closed position

- **Use upstream or downstream of air processing units**

Technical features

Medium:
Compressed air
Operation pressure:
17 bar (246 psi) maximum

Port sizes:
1/4”, 3/8”, 1/2” or 3/4”
Exhaust port:
1/8 PTF with PTF main ports
Rc1/8 with ISO G main ports

Ambient/Media temperature:
-20° ... +80°C (-4° ... +176°F)
Air supply must be dry enough to avoid ice formation at temperatures below +2°C (+35°F).

Materials:
Body: Zinc alloy
Slide: Acetal plastic
Elastomers: NBR

Technical data - standard models

Symbol	Port size	Size	Cv factor from IN to OUT ports	Exhaust port	Weight (kg)	Model
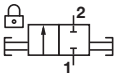	G1/4	—	2,6	—	0,40	T64B-2GB-P1N
	G3/8	—	5,5	—	0,40	T64B-3GB-P1N
	G1/2	Basic	6,7	—	0,38	T64B-4GB-P1N
	G3/4	—	7,5	—	0,38	T64B-6GB-P1N
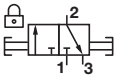	G1/4	—	2,6	1/8”	0,40	T64T-2GB-P1N
	G3/8	—	5,5	1/8”	0,40	T64T-3GB-P1N
	G1/2	Basic	6,7	1/8”	0,38	T64T-4GB-P1N
	G3/4	—	7,5	1/8”	0,38	T64T-6GB-P1N
	G1/4	—	2,6	Unthreaded	0,40	T64E-2GB-P1N
	G3/8	—	5,5	Unthreaded	0,40	T64E-3GB-P1N
	G1/2	Basic	6,7	Unthreaded	0,38	T64E-4GB-P1N
	G3/4	—	7,5	Unthreaded	0,38	T64E-6GB-P1N

Options selector

T64★-★★★- P1N

Type	Substitute
2/2 Black actuator (standard)	B
3/2 Yellow actuator	E
3/2 Red actuator (standard)	T

Port size	Substitute
1/4”	2
3/8”	3
1/2”	4
3/4”	6

Porting	Substitute
Threaded inlet only (standard)	B
Threaded outlet only	C

Threads	Substitute
PTF	A
ISO G parallel (standard)	G

Our policy is one of continued research and development. We therefore reserve the right to amend, without notice, the specifications given in this document. (1999 - 8082c) © 2015 IMI International s.r.o.

Silencer
(T64T only)

T40B1800

Dimensions
Absperrventile

Abmessungen in mm
Projection/First angle

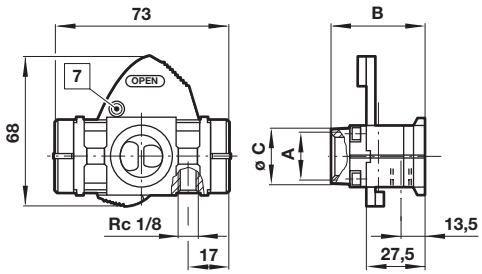

A	B	ø C	Model
G1/4	48	27	T64T-2G*-P1N
G3/8	48	27	T64T-3G*-P1N
G1/2	48	27	T64T-4G*-P1N
G3/4	51	33	T64T-6G*-P1N

* B = Threaded inlet only, C = Threaded outlet only

Schalldämpfer

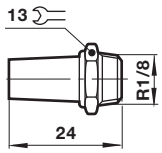

Warning

These products are intended for use in industrial compressed air systems only. Do not use these products where pressures and temperatures can exceed those listed under **»Technical features/data«**.
Before using these products with fluids other than those specified, for non-industrial applications, life-support systems or other applications not within published specifications, consult IMI Precision Engineering, IMI International s.r.o.
Through misuse, age, or malfunction, components used in fluid power systems can fail in various modes.

The system designer is warned to consider the failure modes of all component parts used in fluid power systems and to provide adequate safeguards to prevent personal injury or damage to equipment in the event of such failure.
System designers must provide a warning to end users in the system instructional manual if protection against a failure mode cannot be adequately provided.
System designers and end users are cautioned to review specific warnings found in instruction sheets packed and shipped with these products.

Our policy is one of continued research and development. We therefore reserve the right to amend, without notice, the specifications given in this document. (1999 - 8082c) © 2015 IMI International s.r.o.

P84F 3/2 Soft Start/Dump Valve Excelon® Plus Modular System

- **Port size: 3/8" ... 3/4" (ISO G/PTF)**
- **Excelon® Plus design allows in-line installation or modular installation with other Excelon® Plus products**
- **High forward flow capacity**
- **Fast Exhausting**
- **Variable Snap Adjustment**
- **Solenoid and air pilot options**
- **For use as components in safety-related systems according to DIN EN ISO13849 up to a Performance Level (PL)c Cat. 1**
  Safety function: Safe Venting.

Technical features

Medium:
Compressed air only
Maximum supply pressure:
10 bar (145 psi)
Minimum operating pressure:
3 bar (43 psi)
Port size:
G3/8, G1/2, G3/4,
3/8 PTF, 1/2 PTF, 3/4 PTF

Flow:
51 dm³/s at port size 1/2"
Full flow P1 to P2 at 6,3 bar (91 psi) inlet, with 0,5 bar (7 psi) pressure drop
P2 to P3 = 65 dm³/s.

Ambient/Media temperature:
-20 ... +65°C (-4 ... +149°F)
Air supply must be dry enough to avoid ice formation at temperatures below +2°C (+35°F).

Materials:
Body: Aluminium
End Caps: Aluminum
Body covers: ABS
Elastomers: NBR
Valve: Brass
Air Pilot: Aluminium

Technical data P84F

Symbol	Port Size	Actuation/return	Voltage	Exhaust Port	Weight (kg)	Model
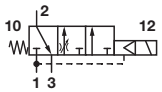	G3/8	Solenoid/spring	24 V d.c.	G1/2	1,0	P84F-3GT-PFN
	G1/2	Solenoid/spring	24 V d.c.	G1/2	1,0	P84F-4GT-PFN
	G3/4	Solenoid/spring	24 V d.c.	G1/2	1,0	P84F-6GT-PFN
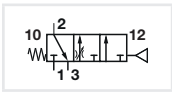	G3/8	Air/spring	N/A	G1/2	1,0	P84F-3GA-NNN
	G1/2	Air/spring	N/A	G1/2	1,0	P84F-4GA-NNN
	G3/4	Air/spring	N/A	G1/2	1,0	P84F-6GA-NNN

Electrical details for solenoid operators

Voltage tolerance:	-10%/+15%
Rating:	100% continuous duty
Inlet orifice:	0,8mm
Electrical connection:	15mm DIN EN 175301-803 (DIN 43650) Form C
Manual override:	Shrouded push button, spring return
Protection class:	IP65
Materials:	PP5 (body), NBR (seals)

Our policy is one of continued research and development. We therefore reserve the right to amend, without notice, the specifications given in this document. (2020-9332a) © 2015 Norgren Ltd.

Option selector

P84F-★★★ -★★N

Function	Substitute
3/2 Soft start / Dump	F

Port Size	Substitute
3/8"	3
1/2"	4
3/4"	6

Thread Form	Substitute
PTF	A
ISO G	G

Voltage	Substitute
24 V d.c.	F
110 V a.c.	A
220 V a.c.	B
Non	N

Solendoid Operator	Substitute
Non-Locking push button	P
Non	N

Operator *2)	Substitute
Air pilot*1)	A
Solenoid Operated	T

Flow characteristics

Port 1 to 2
Port size: 1/2"

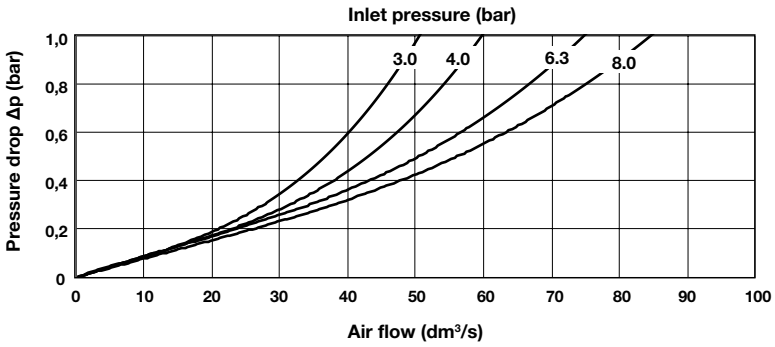

Port 1 to 2
Port size: 3/8"

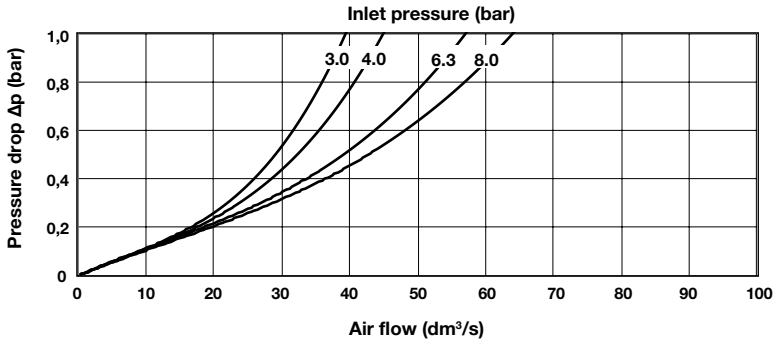

Our policy is one of continued research and development. We therefore reserve the right to amend, without notice, the specifications given in this document. (2020-9332a) © 2015 Norgren Ltd.

Accessories

Connection cable with plug,LED and M12 Female

Description	Cable length (m)	Model
PUR-Cable; M12/valve type C DIN connector	0,6	NC-DINCA-123MS-A
	1	NC-DINCA-123MS-1
	2	NC-DINCA-123MS-2
	5	NC-DINCA-123MS-5

Plug with with moulded cable and indicator

Voltage	Cable length (m)	Model
12 - 24 V a.c. / d.c	1	V10014-D01
12 - 24 V a.c. / d.c	3	V10014-D03
110 V a.c. / d.c.	1	V10015-D01
110 V a.c. / d.c.	3	V10015-D03
220 V a.c. / d.c	1	V10016-D01
220 V a.c. / d.c	3	V10016-D03

Plug with moulded cable

Description	Cable length (m)	Model
3 pin plug with moulded cable	1	V10013-D01
3 pin plug with moulded cable	3	V10013-D03

Light Emitting Seals ,15mm form C

Description	Model
Light Emitting Seals Circuit A (12 - 24 V d.c.)	V10037-E13
Light Emitting Seals Circuit B (110 - 120 V a.c.)	V10037-E18
Light Emitting Seals Circuit B (220 - 240 V a.c.)	V10037-E19

Plug with cable gland and indicator

Description	Model
Plug with cable gland and indicator 12-24 V a.c. / d.c., c/w LED / VDR	V10012-D13
Plug with cable gland and indicator 110 V a.c. / d.c., c/w LED / VDR	V10012-D18
Plug with cable gland and indicator 220 V a.c. / d.c., c/w LED / VDR	V10012-D19

M12 Adaptor Rear - MSUP Valve Plug Form C 8MM

V13981-E01

M12 Adaptor Top - MSUP Valve Plug Form C 8MM

V13980-E01

Plug with cable gland

V10027-D00

Our policy is one of continued research and development. We therefore reserve the right to amend, without notice, the specifications given in this document. (2020-9332a) © 2015 Norgren Ltd.

Accessories

Quikclamp®

Page 7

840014-51KIT

Quikclamp® with bracket assembled

Page 7

840014-52KIT

Pressure sensing block 1/4 PTF

Page 7

840016-50KIT

Pressure sensing block G1/4

Page 7

840016-51KIT

Port Adaptors

Page 8

1/4 PTF	840015-01KIT
3/8 PTF	840015-02KIT
1/2 PTF	840015-03KIT
3/4 PTF	840015-04KIT
G1/4	840015-09KIT
G3/8	840015-10KIT
G1/2	840015-11KIT
G3/4	840015-12KIT

Hybrid Quikclamp® *1

Page 7

840014-61

Hybrid Quikclamp® with bracket assembled *1

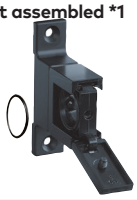

Page 7

840014-62

*1) To connect new Excelon Plus to old Excelon 74/73 units. Having the same hole centres as 74 series mounting bracket.
A Quikclamp adds 13.6 mm to the overall width of a combination unit

Full flow porting block 3/4" PTF

Page 8

840028-50KIT

Full flow porting block G3/4

Page 8

840028-53KIT

Full flow porting block 3/4" PTF

Page 8

840028-50KIT

Full flow porting block G3/4

Page 8

840028-53KIT

Pressure switch interface block (18D pressure switch) G1/4

Page 8

0337717000000000

Pressure switch 18D (0,5 ... 8bar) *1

Page 8

0881300

Digital pressure switch 51D (-1 ... 10 bar) *2

Page 9

0860810

Electronic Pressure Sensor – stand alone version *3

Q84G

Silencer

Heavy duty muffler, 1/2" NPT male thread, brass wire element

MB004A

Heavy duty muffler, R1/2 male thread, brass wire element

MB004B

*1) Flanged version. For other pressure ranges, please see data sheet 5.11.001
*2) For other pressure ranges, please see data sheet 5.11.385

*3) Q84G stand alone electronic pressure sensor module

Voltage rating and spare coils

	Voltage	Power	Replacement
	24 V d.c.	1,2 W	840650-50KIT
	110 V a.c.	1,5 VA	840650-51KIT
	220 V a.c.	1,5 VA	840650-52KIT

Our policy is one of continued research and development. We therefore reserve the right to amend, without notice, the specifications given in this document. (2020-9332a) © 2015 Norgren Ltd.

Dimensions

Dimensions in mm
Projection/First angle

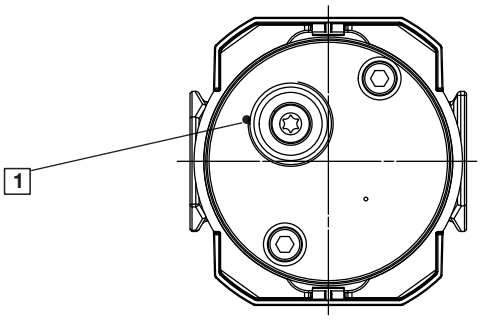

1 1/2" exhaust port (NPT or ISO G)

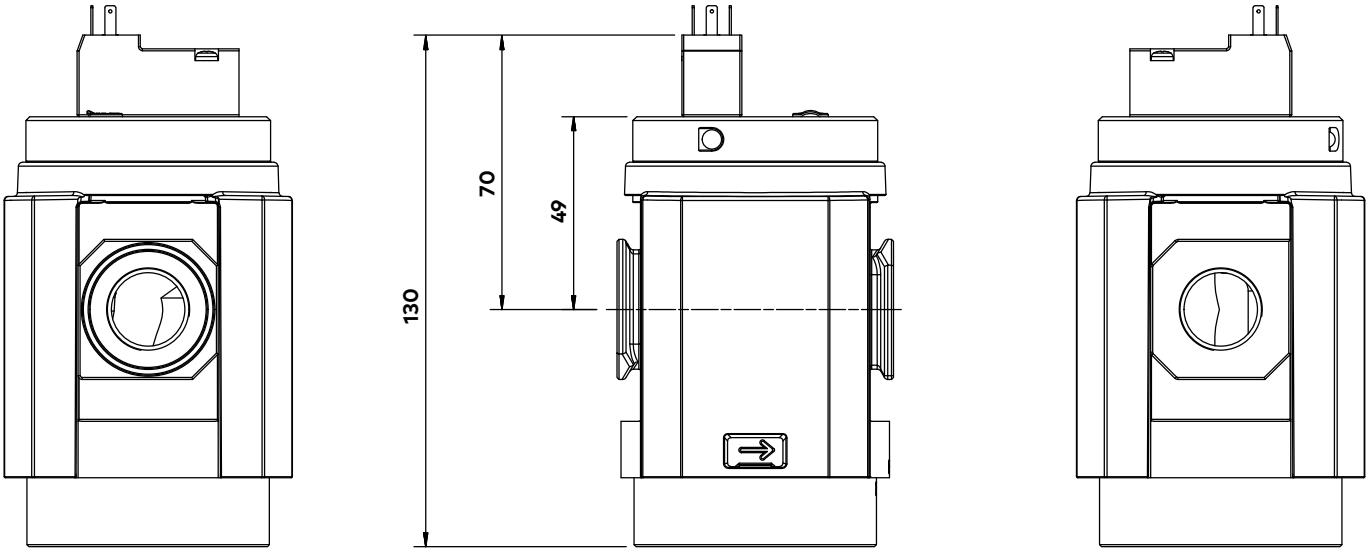

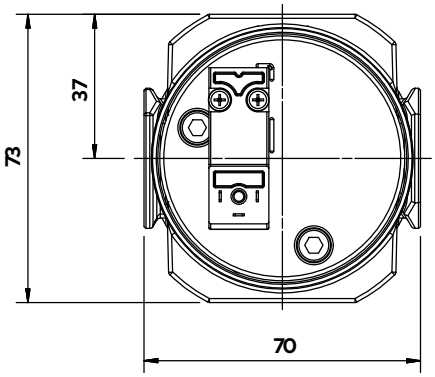

Our policy is one of continued research and development. We therefore reserve the right to amend, without notice, the specifications given in this document. (2020-9332a) © 2015 Norgren Ltd.

Dimensions

Air Pilot Operator

Dimensions in mm
Projection/First angle

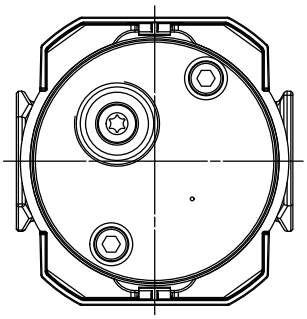

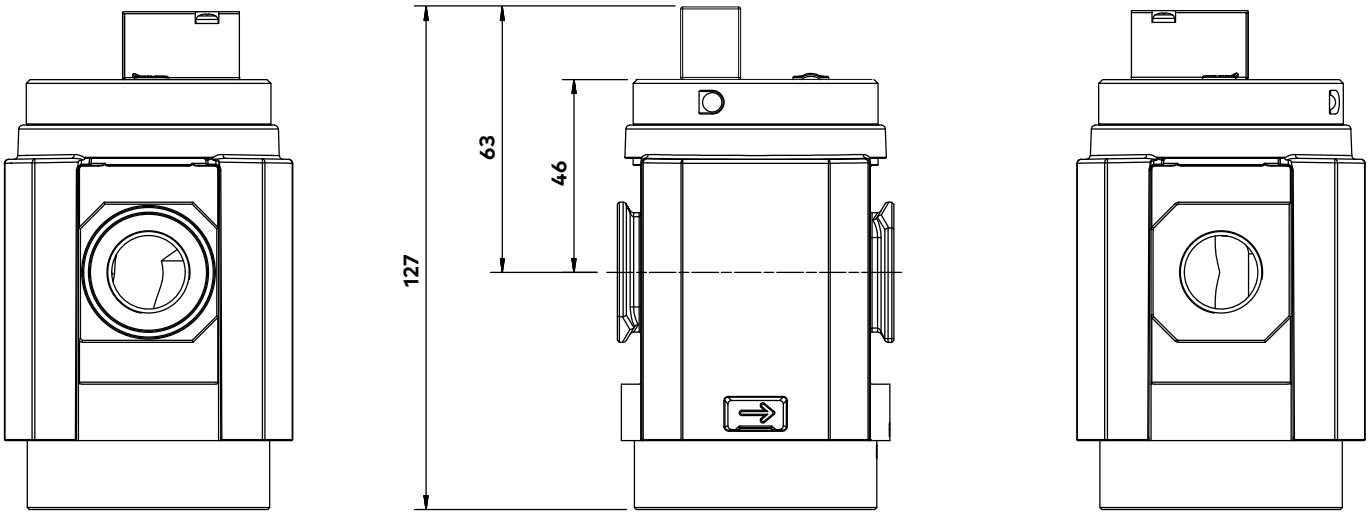

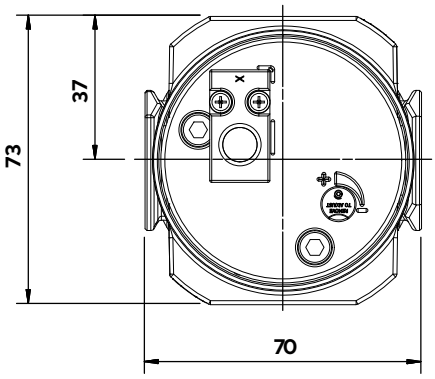

Our policy is one of continued research and development. We therefore reserve the right to amend, without notice, the specifications given in this document. (2020-9332a) © 2015 Norgren Ltd.

Accessories

Dimensions in mm
Projection/First angle

Quikclamp® with wall bracket

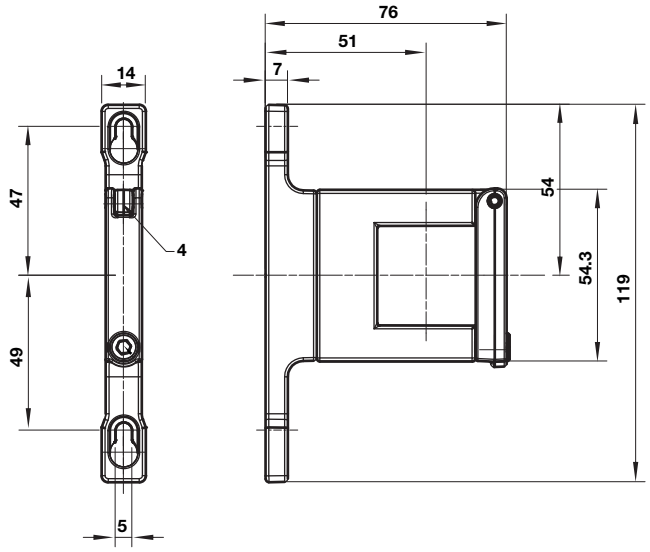

Quikclamp®

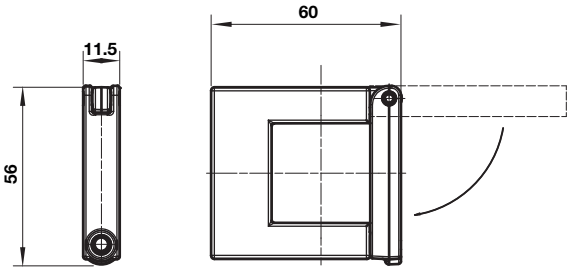

Hybrid-Quikclamp® with wall bracket

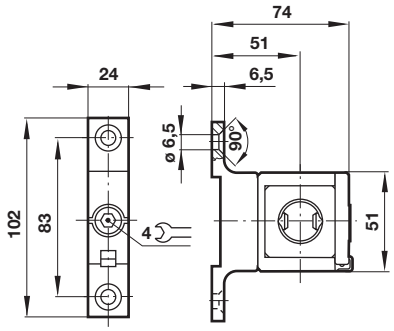

Hybrid-Quikclamp®

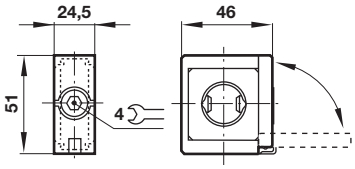

Pressure sensing block

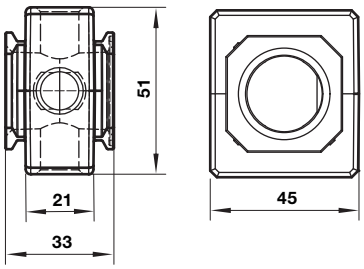

Our policy is one of continued research and development. We therefore reserve the right to amend, without notice, the specifications given in this document. (2020-9332a) © 2015 Norgren Ltd.

Full flow porting block horizontal

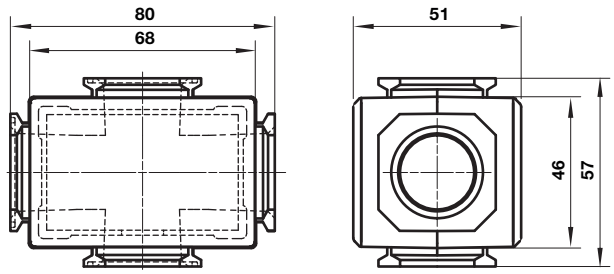

Full flow porting block vertical

Dimensions in mm
Projection/First angle

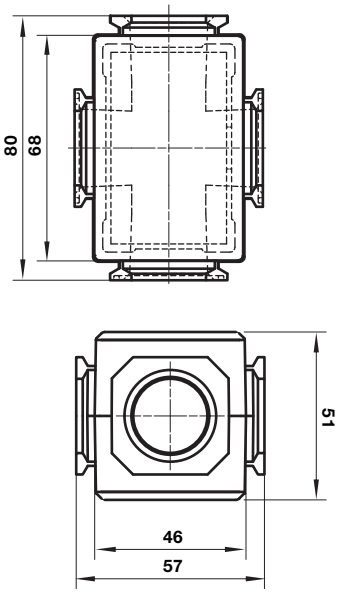

Porting block for 18D pressure switch

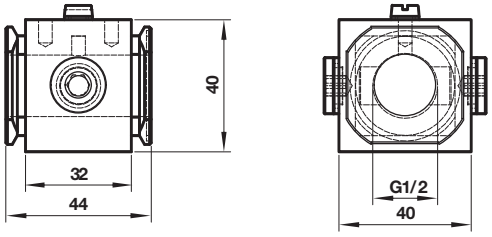

18D Pressure switch

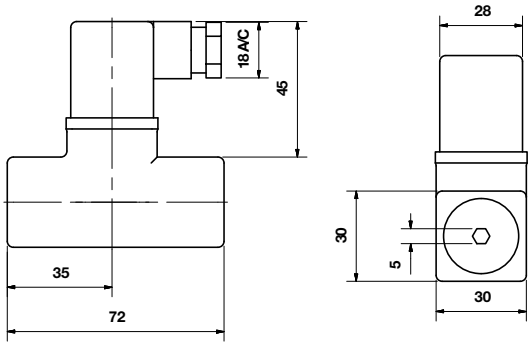

18D Porting block and 18D assembled

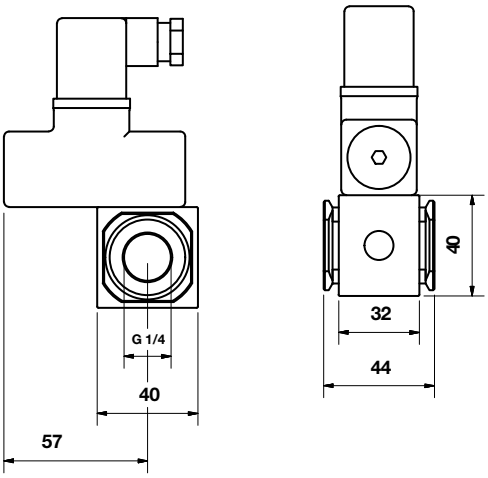

Pipe adaptor

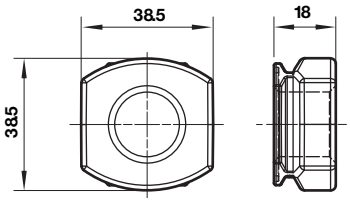

Our policy is one of continued research and development. We therefore reserve the right to amend, without notice, the specifications given in this document. (2020-9332a) © 2015 Norgren Ltd.

51D Pressure switch - digital

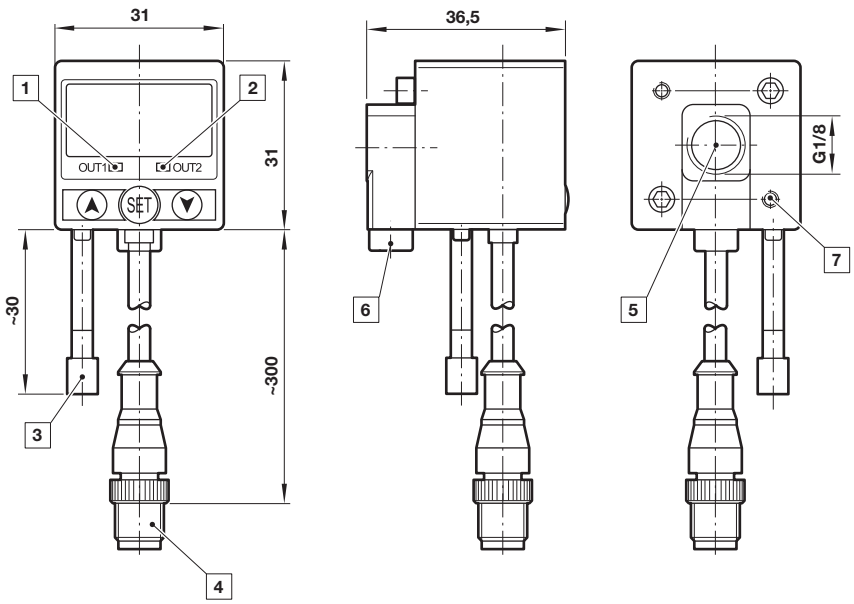

1 Switch OUT 1, green LED
2 Switch OUT 2, red LED
3 Dustproof protector
4 Connector M12 x 1
5 Inlet port
6 Alternative inlet port G1/8 plugged
7 Thread for mounting screw

Silencer

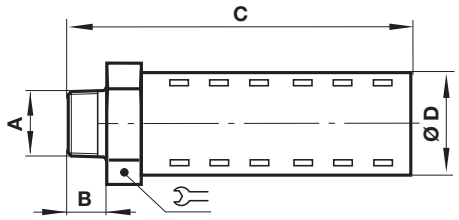

A	B	C	D		Model
R1/2	17	92	32	32	MB004B
1/2 NPT	17	92	32	32	MB004A

Warning

These products are intended for use in industrial compressed air systems only. Do not use these products where pressures and temperatures can exceed those listed under »**Technical features/ data**«.
Before using these products with fluids other than those specified, for non-industrial applications, life-support systems or other applications not within published specifications, consult Norgren Co. Ltd.

Through misuse, age, or malfunction, components used in fluid power systems can fail in various modes.

The system designer is warned to consider the failure modes of all component parts used in fluid power systems and to provide adequate safeguards to prevent personal injury or damage to equipment in the event of such failure.
System designers must provide a warning to end users in the system instructional manual if protection against a failure mode cannot be adequately provided.
System designers and end users are cautioned to review specific warnings found in instruction sheets packed and shipped with these products.

Our policy is one of continued research and development. We therefore reserve the right to amend, without notice, the specifications given in this document. (2020-9332a) © 2015 Norgren Ltd.

T84T - 3/2 shut-off valve
Excelon® Plus Modular System

- **Port size: 3/8" ... 3/4" (ISO G/PTF)**
- **Excelon® Plus design allows in-line installation or modular installation with other Excelon® Plus products**
- **3/2 way function**
- **Threaded exhaust port**
- **Lockable in closed position with padlock**
- **High Corrosion resistance: Metal body with electrophoretic paint finish**
- **DoC in accordance with 2014/34/EU/ATEX**

Technical features

Medium:
Compressed air only
Maximum supply pressure:
20 bar (290 psi)
Port size:
G3/8, G1/2, G3/4,
3/8 PTF, 1/2 PTF, 3/4 PTF

Flow:
From IN to OUT ports:
1/2": 162 dm^3/s at 6,3 bar and Δp 0,5 bar pressure drop,
1,8 dm^3/s from OUT to exhaust port.
Atex:
Shut-off valves T84 are in conformity with Atex 2014/34/EU
II 2 GD
Ex h IIC T6 Gb
EX h IIIC T85°C Db

Ambient/Media temperature:
-20 ... +65°C (-4 ... +149°F)
Air supply must be dry enough to avoid ice formation at temperatures below +2°C (+35°F).

Materials:
Body: Die cast aluminium
Body covers: ABS
Elastomers: NBR

Technical data T84T - standard models

Symbol	Port size	Function	Valve type	Exhaust port forms	Weight (kg)	Model
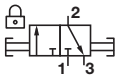	G3/8	3/2	Ball valve	Exhaust port threaded G1/4	0,48	T84T-3GA-B1N
	G1/2	3/2	Ball valve	Exhaust port threaded G1/4	0,48	T84T-4GA-B1N
	G3/4	3/2	Ball valve	Exhaust port threaded G1/4	0,48	T84T-6GA-B1N

Option selector

T84T-★★A-B1N

Function	Substitute
3/2	T

Thread form	Substitute
PTF	A
ISO G parallel (standard)	G
Port size	**Substitute**
3/8"	3
1/2"	4
3/4"	6

Excelon Plus adheres to the following harmoised standard and technical specifications:

2014/34/EU Equipment and protective systems intended for use in potentially explosive atmospheres.
The following harmonised standards and technical specifications have been applied ISO 4414:2010 – Pneumatic fluid power – General rules and safety requirements for systems and their components; ISO 80079-36:2016 – Explosive atmospheres – Part 36: Non-electrical equipment for explosive atmospheres – Basic method and requirements; ISO 80079-37:2016 – Explosive atmospheres
Part 37: Non-electrical equipment for explosive atmospheres – Non-electrical type of protection constructional safety "c", control of ignition sources "b", liquid immersion "k".

II 2 GD

Ex h IIC T6 Gb
Ex h IIIC T85°C Db
ATEX Certification No.: NORGREN 18.0001X

Our policy is one of continued research and development. We therefore reserve the right to amend, without notice, the specifications given in this document. (2017 - 9219c) © 2020 Norgren Ltd

Accessories

Wall mounting bracket

Page 5

840024-50KIT

Quikclamp®

Page 5

840014-51KIT

Quikclamp® with bracket assembled

Page 5

840014-52KIT

Hybrid Quikclamp® *1

Page 5

840014-61

Hybrid Quikclamp® with bracket assembled *1

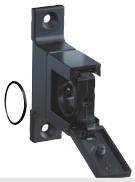

Page 5

840014-62

*1) To connect new Excelon Plus to old Excelon 74/73 units. Having the same hole centres as 74 series mounting bracket. A Quikclamp adds 13.6 mm to the overall width of a combination unit

Connector 84-82 Series *2

Page 5

4417-01

Port Adaptors

Page 5

1/4 PTF	840015-01KIT
3/8 PTF	840015-02KIT
1/2 PTF	840015-03KIT
3/4 PTF	840015-04KIT
G1/4	840015-09KIT
G3/8	840015-10KIT
G1/2	840015-11KIT
G3/4	840015-12KIT

Pressure sensing block 1/4 PTF

Page 5

840016-50KIT

Pressure sensing block G1/4

Page 5

840016-51KIT

Full flow porting block 3/4" PTF

Page 6

840028-50KIT

Full flow porting block G3/4

Page 6

840028-53KIT

Full flow porting block 3/4" PTF

Page 6

840028-68KIT

Full flow porting block G3/4

Page 6

840028-69KIT

Pressure switch interface block (18D pressure switch) G1/4

Page 6

0337717000000000

Pressure switch 18D (0,5 ... 8bar) *1

Page 6

0881300

Digital pressure switch 51D (-1 ... 10 bar) *2

Page 7

0860810

Electronic Pressure Sensor – stand alone version *3

Q84G

*1) Flanged version. For other pressure ranges, please see data sheet 5.11.001
*2) For other pressure ranges, please see data sheet 5.11.385
*3) .

IO-Link cables

Connection cable M8x1 for integrated digital pressure switch

Description	Cable length (m)	Model
M8 female to M12 male	0,6	NC-084FS-124MS-A
	1,0	NC-084FS-124MS-1
	2,0	NC-084FS-124MS-2
	5,0	NC-084FS-124MS-5
M8 female to free end	5,0	NC-084FS-00000-5

Our policy is one of continued research and development. We therefore reserve the right to amend, without notice, the specifications given in this document. (2017 - 9219c) © 2020 Norgren Ltd

Padlock

Padlock

840055-01KIT

Lockout device

840055-02KIT

Silencer

Porous plastic silencer *3) G1/4

M/S2

Plastic silencer *3) G1/4

0014600000000000

Sinter bronze silencer *3) G1/4

T40C2800

Sinter bronze silencer *3) 1/4 PTF

MS002A

*3) Max. pressure of silencers listed in this data sheet : 10bar. For pressure higher than 10bar please contact Norgren

Our policy is one of continued research and development. We therefore reserve the right to amend, without notice, the specifications given in this document. (2017 - 9219c) © 2020 Norgren Ltd

Dimensions

Dimensions in mm
Projection/First angle

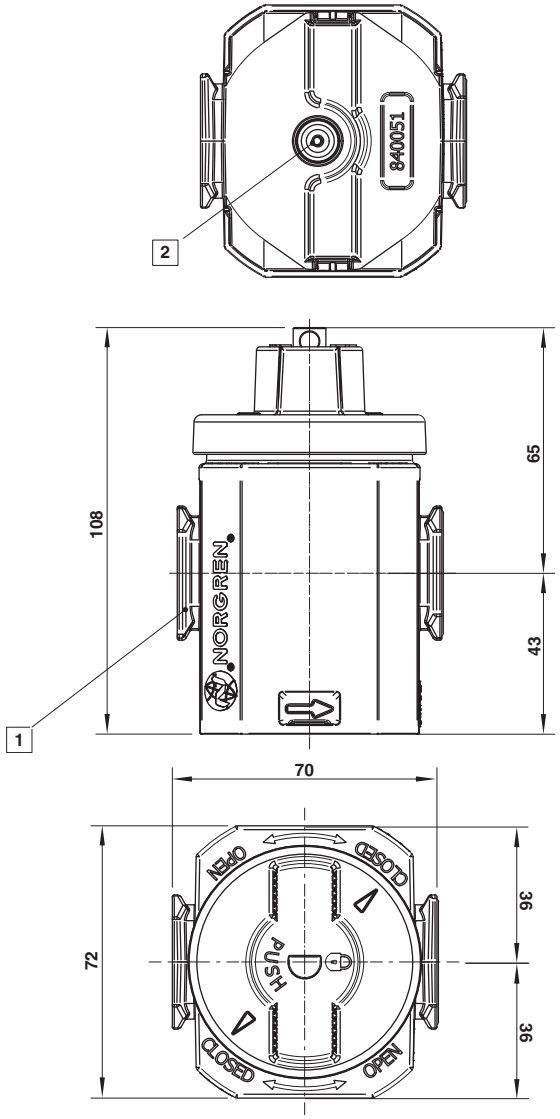

1 Main ports
3/8", 1/2" OR 3/4" ISO G/PTF
2 Exhaust Port G1/4 or 1/4 PTF

Our policy is one of continued research and development. We therefore reserve the right to amend, without notice, the specifications given in this document. (2017 - 9219c) © 2020 Norgren Ltd

Accessories

Dimensions in mm
Projection/First angle

Quikclamp® with wall bracket

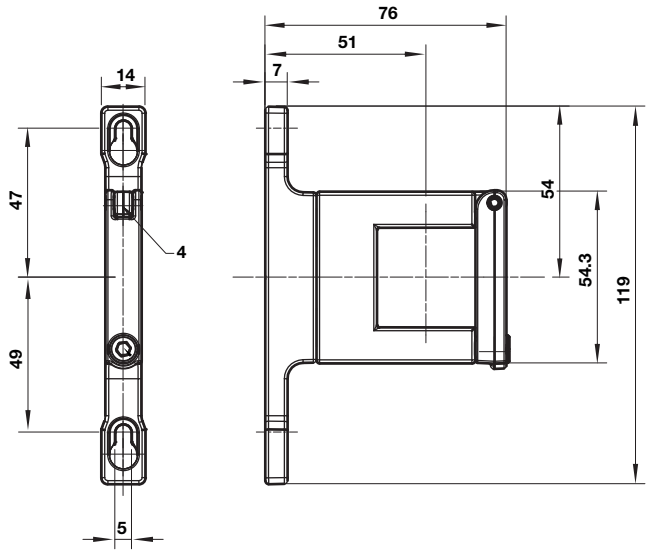

Quikclamp®

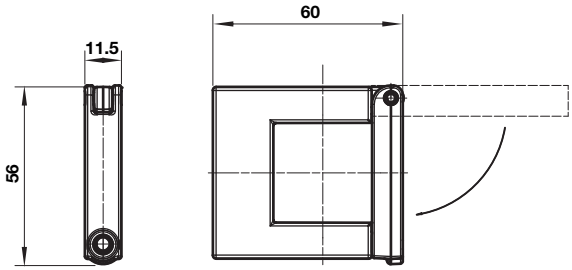

Hybrid-Quikclamp® with wall bracket

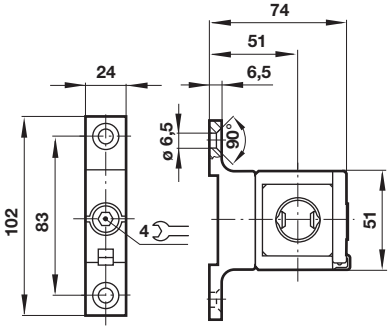

Hybrid-Quikclamp®

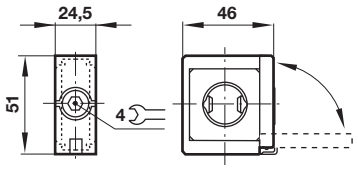

Connector 84-82 Series

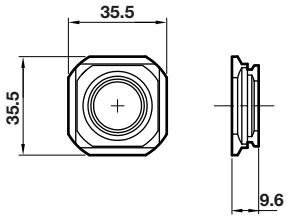

Mounting bracket

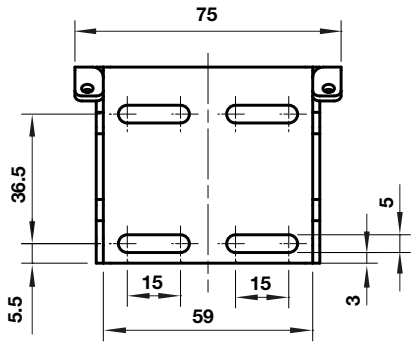

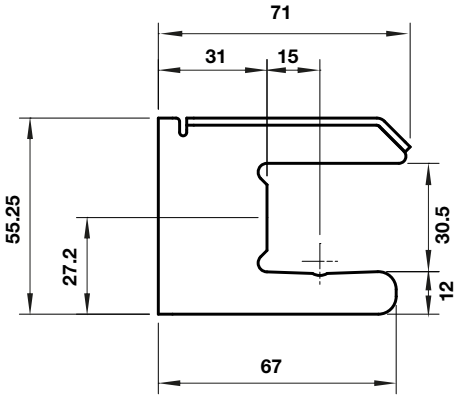

Pressure sensing block

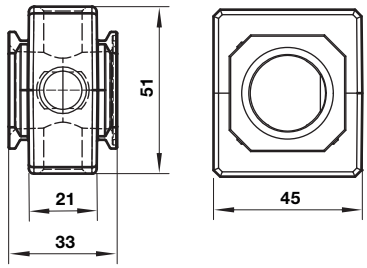

Our policy is one of continued research and development. We therefore reserve the right to amend, without notice, the specifications given in this document. (2017 - 9219c) © 2020 Norgren Ltd

Full flow porting block horizontal

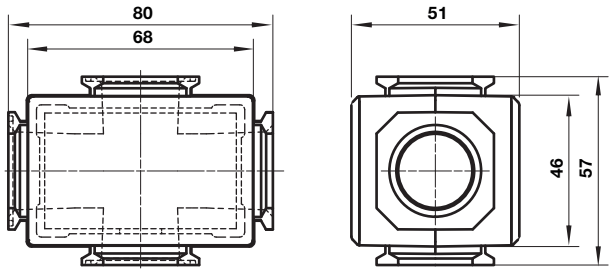

Full flow porting block vertical

Dimensions in mm
Projection/First angle

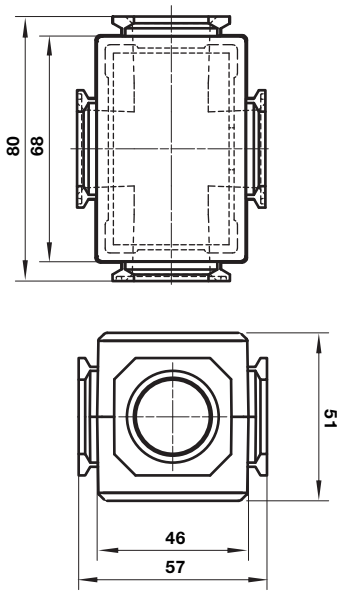

Porting block for 18D pressure switch

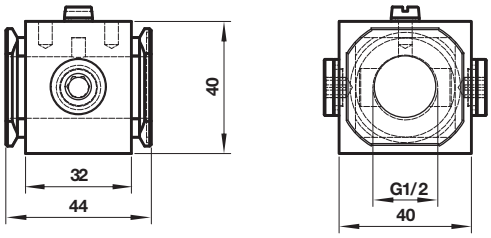

18D Pressure switch

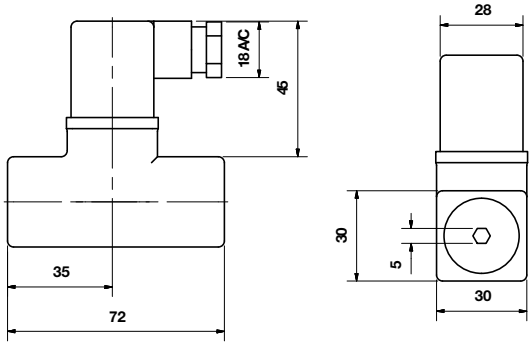

18D Porting block and 18D assembled

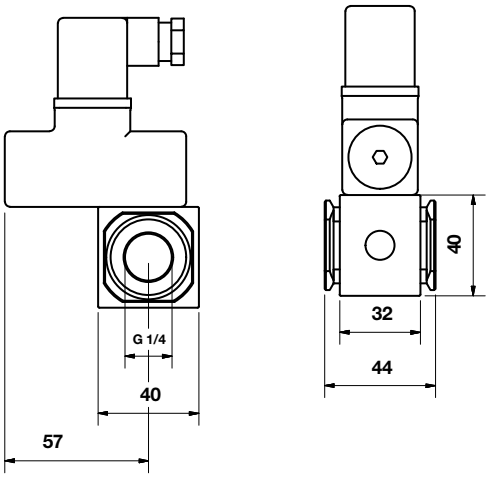

Pipe adaptor

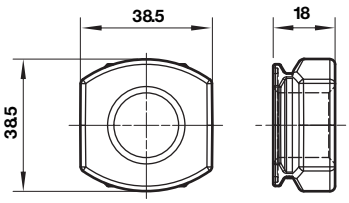

Our policy is one of continued research and development. We therefore reserve the right to amend, without notice, the specifications given in this document. (2017 - 9219c) © 2020 Norgren Ltd

51D Pressure switch - digital

Dimensions in mm
Projection/First angle

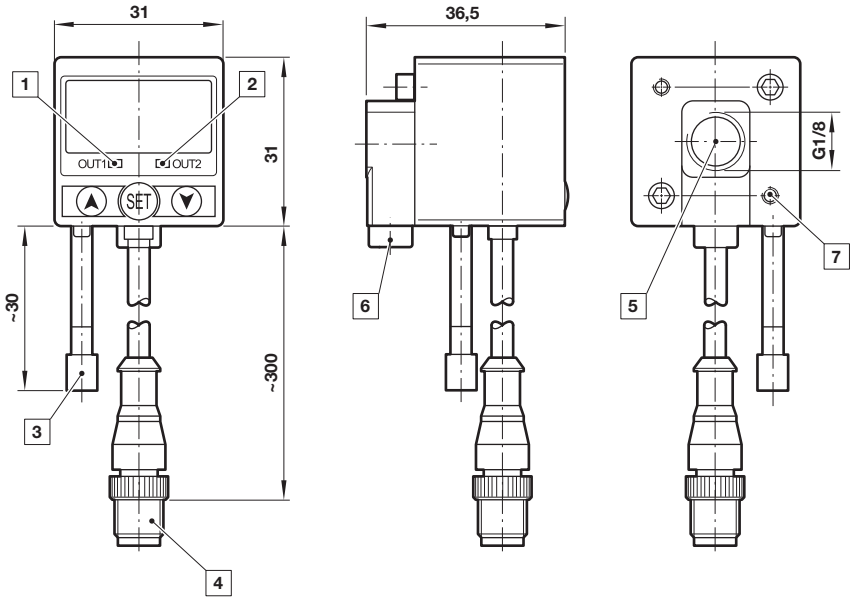

1 Switch OUT 1, green LED
2 Switch OUT 2, red LED
3 Dustproof protector
4 Connector M12 x 1
5 Inlet port
6 Alternative inlet port G1/8 plugged
7 Thread for mounting screw

Warning

These products are intended for use in industrial compressed air systems only. Do not use these products where pressures and temperatures can exceed those listed under »**Technical features/ data**«.
Before using these products with fluids other than those specified, for non-industrial applications, life-support systems or other applications not within published specifications, consult Norgren Ltd.

Through misuse, age, or malfunction, components used in fluid power systems can fail in various modes.

The system designer is warned to consider the failure modes of all component parts used in fluid power systems and to provide adequate safeguards to prevent personal injury or damage to equipment in the event of such failure.
System designers must provide a warning to end users in the system instructional manual if protection against a failure mode cannot be adequately provided.
System designers and end users are cautioned to review specific warnings found in instruction sheets packed and shipped with these products.

Our policy is one of continued research and development. We therefore reserve the right to amend, without notice, the specifications given in this document. (2017 - 9219c) © 2020 Norgren Ltd

- **Port size: 1/4" ... 3/4" (ISO G/PTF)**
- **Assists machine designers in complying with the European Machineries Directive**
- **High forward flow capacity**
- **High flow dump facility**
- **Soft start valves allow a controlled increase of pressure onto downstream cylinders /machines offering protection to personnel equipment**
- **The positively driven micro switch ensures amonitored dump function**

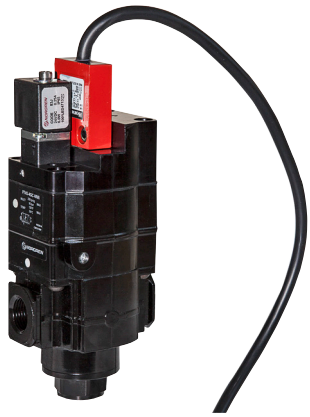

Technical features

Medium:
Compressed air only
Operating pressure:
3 bar (43 psi) minimum
10 bar (145 psi) maximum
Snap pressure:
Full flow when downstream pressure reaches 35 – 60% of inlet pressure
Charge time:
For 2 litre downstream volume and 6,3 bar (90 psi) inlet pressure
0,2 sec. minimum
75 sec. maximum

Port size:
G1/4, G3/8, G1/2, G3/4,
1/4PTF, 3/8 PTF 1/2 PTF , 3/8 PTF
Pilot port:
Rc1/4 with ISO G main ports
1/4 PTF with PTF main ports
Exhaust port:
G1/2 with ISO G main ports
1/2 PTF with PTF main ports
Flow:
57 dm^3/s
Operating pressure: 6,3 bar (91 psi)
Δp: 0,5 bar (7 psi)
P1 » P2 = Cv 4,2; P2 » P3 = Cv 5,6

Ambient/Media temperature:
-20 ... +50°C (+4 ... +122°F)
pilot operated
Air supply must be dry enough to avoid ice formation at temperatures below +2°C (+35°F).

Materials:
Body & intermediate body: Aluminium
Elastomers: Synthetic materials
Filter discs: Sintered plastic
Internal components: Brass/steel
Top plate & exhaust bonnet: Zinc

Electrical details for solenoid operators

Voltage tolerance	± 10%
Rating	100% continuous duty
Inlet orifice	1,0 mm
Electrical connection	Industrial Standard, 22 mm
Solenoid coil mounting	Four positions x 90°
Protection class	IP 65 (with sealed plug)

Electrical details for monitoring switch

Voltage	240 V a.c.
Current	1,5 A
Connection cable	Harmonised CENELEC 5 x 0,75 mm^2
Cable length	2 m
Protection class	IP 66

Switch details
All electrical connections to be made by a competent licensed electrician
Break - before – Make contact
1 Normally Open / 1 Normally Closed

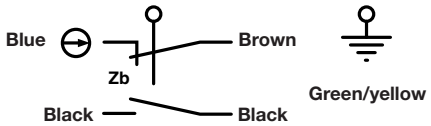

Technical data - standard models

Symbol	Port size	Size	Actuation/ return	Voltage	Weight (kg)	Typ
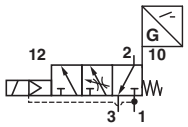	G1/4	—	Solenoid/spring	24 V d.c.	1,05	P74S-2GC-N1N
	G3/8	—	Solenoid/spring	24 V d.c.	1,08	P74S-3GC-N1N
	G1/2	Basic	Solenoid/spring	24 V d.c.	1,05	P74S-4GC-N1N
	G3/4	—	Solenoid/spring	24 V d.c.	1,41	P74S-6GC-N1N

Voltage codes and spare coils

22 mm coil for connector interface acc. to industrial standard

	Voltage	Power Inrush/Hold	Model	Code
	24 V d.c	2 W	QM/48/13J/21	13J

Connector plugs

Industrial standard 22 mm 2-pole + PE

0657868

Our policy is one of continued research and development. We therefore reserve the right to amend, without notice, the specifications given in this document. (2015 - 5167d) © 2015 IMI International s.r.o.

Option selector

P74S-★★C-N1N

Port size	Substitute
1/4"	2
3/8"	3
1/2"	4
3/4"	6

Thread size	Substitute
PTF	A
ISO G parallel (standard)	G

Flow characteristics

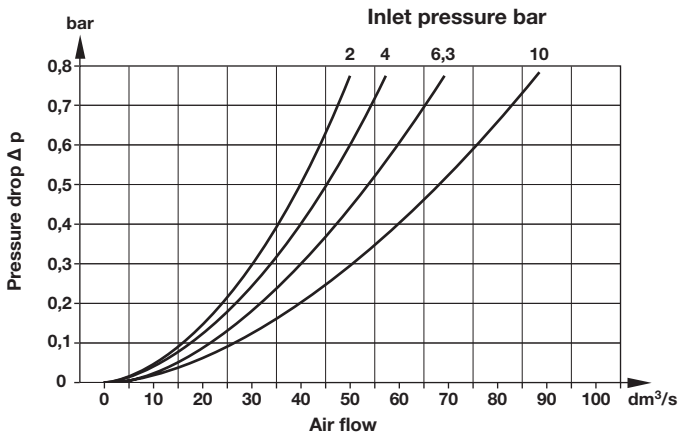

Maximum charge time

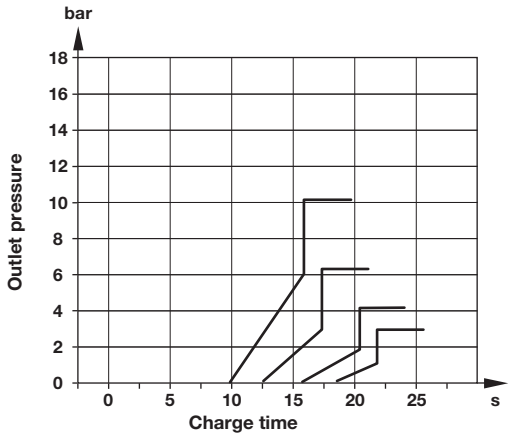

Our policy is one of continued research and development. We therefore reserve the right to amend, without notice, the specifications given in this document. (2015 - 5167d) © 2015 IMI International s.r.o.

Accessories

Wall mounting bracket	Quikclamp®	Quikclamp with wall bracket®	Quikmount pipe adaptor *1)	Porting block with three alternative 1/4" ports	2/2 Shut-off valves (for full technical specification see datasheet 8.200.600)	3/2 Shut-off valves (for full technical specification see datasheet 8.200.600)
		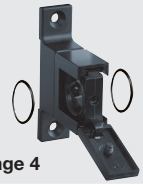				
Page 4	Page 4	Page 4	Page 4	Page 4	Page 4	Page 4
4324-50	4314-51	4314-52	G3/8: 4315-10	G1/4: 4316-52	G 3/8: T74B-3GA-P1N	G 3/8: T74T-3GA-P1N
			G1/2: 4315-11	1/4 PTF: 4316-50	G 1/2: T74B-4GA-P1N	G 1/2: T74T-4GA-P1N
			G3/4: 4315-12		G 3/4: T74B-6GA-P1N	G 3/4: T74T-6GA-P1N
			3/8 PTF: 4315-02		3/8 PTF: T74B-3AA-P1N	3/8 PTF: T74T-3AA-P1N
			1/2 PTF: 4315-03			1/2 PTF: T74T-4AA-P1N
			3/4 PTF: 4315-04		3/4 PTF: T74B-6AA-P1N	3/4 PTF: T74T-6AA-P1N

*1) Please use a Quikmount pipe adaptor if the Quikclamp be mounted at inlet or outlet side.

Pressure switch

Porting block for pressure switch	Pressure switch (0,5 ... 8 bar)
Page 4	
0523110000000000	0881300000000000

Padlock

Padlock (brass) with two keys *1)
0613633000000000

*1) for shut-off valves

Silencer

Silencer
Page 4
R1/2: MB004B
1/2 NPT: MB004A

Drawing

Dimensions in mm
Projection/First angle

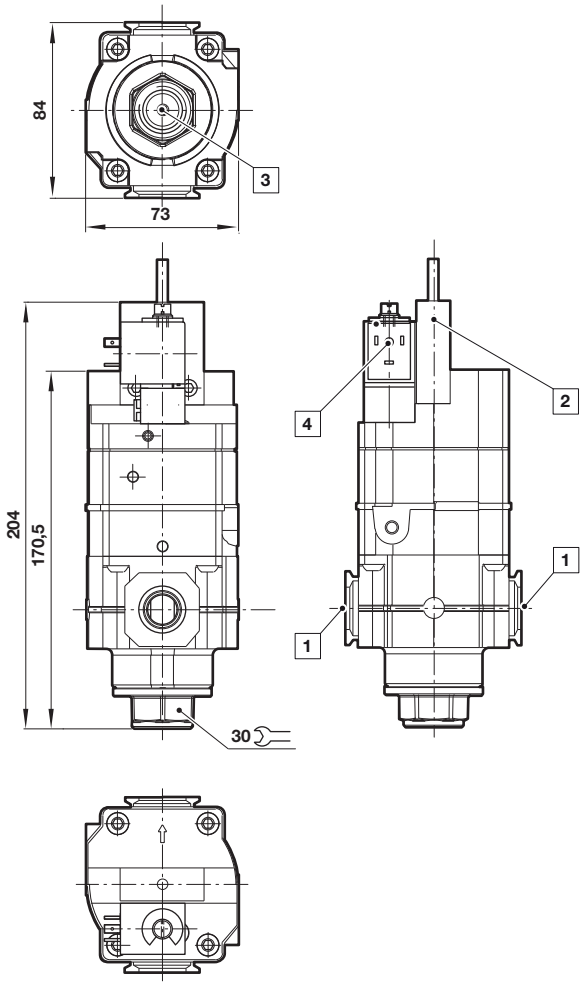

1 Main sorts 1/4", 3/8", 1/2" or 3/4"
2 Monitored switch
3 Exhaust port
4 Solenoid

Our policy is one of continued research and development. We therefore reserve the right to amend, without notice, the specifications given in this document. (2015 - 5167d) © 2015 IMI International s.r.o.

Accessories

Dimensions in mm
Projection/First angle

Quikclamp®

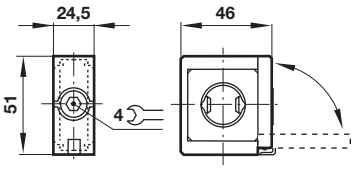

Quikclamp® with wall bracket

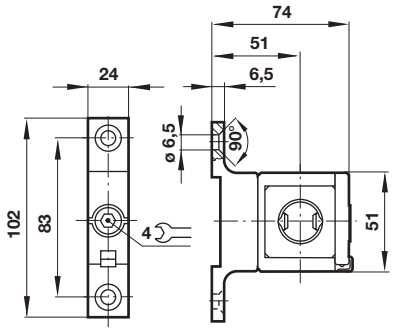

Porting block

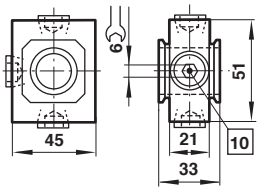

10 Ports 1/4" ISO G/PTF plugged

Pipe adapter

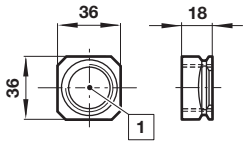

1 Main ports 3/8", 1/2" or 3/4" ISO G/PTF

Wall mounting bracket

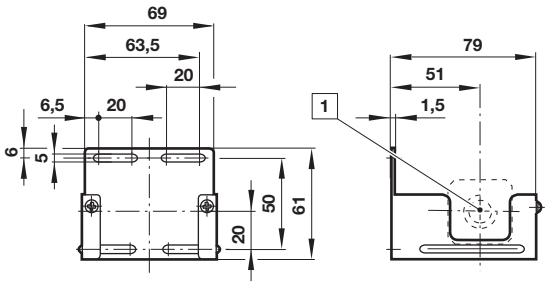

1 Main ports

Shut-off valves

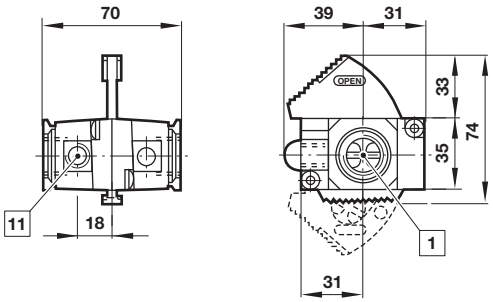

1 Main ports 3/8", 1/2" or 3/4" ISO G/PTF
11 Exhaust port Rc1/8

Porting block for pressure switch

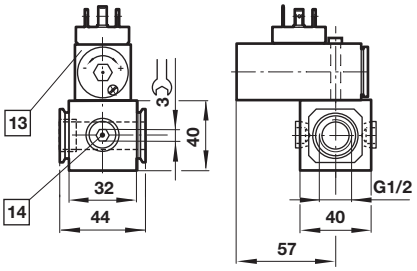

13 Pressure switch is not in scope of delivery
14 Alternative G1/4 ports plugged

Silencer

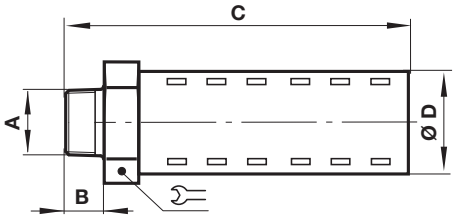

A	B	C	D		Model
R1/2	17	92	32	32	MB004B
1/2 NPT	17	92	32	32	MB004A

Warning

These products are intended for use in industrial compressed air systems only. Do not use these products where pressures and temperatures can exceed those listed under **»Technical features/data«**.
Before using these products with fluids other than those specified, for non-industrial applications, life-support systems or other applications not within published specifications, consult IMI Precision Engineering, IMI International s.r.o.
Through misuse, age, or malfunction, components used in fluid power systems can fail in various modes.

The system designer is warned to consider the failure modes of all component parts used in fluid power systems and to provide adequate safeguards to prevent personal injury or damage to equipment in the event of such failure.
System designers must provide a warning to end users in the system instructional manual if protection against a failure mode cannot be adequately provided.
System designers and end users are cautioned to review specific warnings found in instruction sheets packed and shipped with these products.

Our policy is one of continued research and development. We therefore reserve the right to amend, without notice, the specifications given in this document. (2015 - 5167d) © 2015 IMI International s.r.o.

- **Port size: Unthreaded Ports, 1/2” basic size**
- **Excelon design allows in-line installation or modular installation with other Excelon products**
- **Solenoid or air pilot actuated**
- **Customised poppets for long service life**
- **High flow spring return**

Technical features

Medium:
Compressed air only
Operating pressure:
3 ... 10 bar (44 ... 145 psi) solenoid actuated
3 ... 17 bar (44 ... 250 psi) pilot actuated
Port size:
Unthreaded
Pilot port:
G1/4 with ISO G main ports
1/4 PTF with PTF main ports

Exhaust port:
G1/2 with ISO G main ports
1/2 PTF with PTF main ports
Flow factor:
2/2 Cv = 4.0
3/2 IN » OUT Cv = 3,2
3/2 OUT » EXHAUST Cv = 5,3
Flow direction:
2/2 NC: A » B
2/2 NO: A » B
3/2: B » A

Ambient/Media temperature:
Solenoid operated:
Depending on solenoid rating
-20° ... +50°C (+4° ... +122°F)
Pilot operated
-20° ... +80°C (+4° ... +176°F)
Version with gauge:
-20° ... +65°C (+4 ... +149°F)
Air supply must be dry enough to avoid ice formation at temperatures below +2°C (+35°F).

Materials:
Body: Zinc
Elastomers: Synthetic materials
Internal components: Aluminium

Electrical details for solenoid operators

Voltage tolerance	± 10%
Rating	100% continuous duty
Inlet orifice	1,0 mm
Electrical connection	Industrial Standard, 22 mm
Solenoid coil mounting	Four positions x 90°
Protection class	IP 65 (with sealed plug)

Technical data - standard models

Symbol	Port size *1)	Size	Actuation/ return	Operating pressure (bar)	Pilot pressure (bar)	Voltage	Gewicht (kg)	Drawing No.	Model
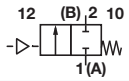	1/2”	Basic	Air pilot/Spring	3 ... 17	3 ... 17	—	0,54	1	P74A-NGA-NNN
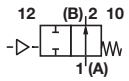	1/2”	Basic	Air pilot/Spring	3 ... 17	3 ... 17	—	0,54	1	P74B-NGA-NNN
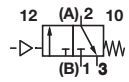	1/2”	Basic	Air pilot/Spring	3 ... 17	3 ... 17	—	0,54	2	P74C-NGA-NNN
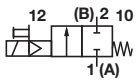	1/2”	Basic	Solenoid/Spring	3 ... 10	—	24 V d.c.	0,74	3	P74A-NNC-PFA *2)
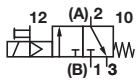	1/2”	Basic	Solenoid/Spring	3 ... 10	—	24 V d.c.	0,74	4	P74C-NGC-PFA *2)

*1) Unthreaded
*2) To select other solenoid type and coil voltage refer to option selector on page 2

Our policy is one of continued research and development. We therefore reserve the right to amend, without notice, the specifications given in this document. (1998 - 8065d) © 2014 Norgren Ltd

Option selector

P74★-N★★-★★★

Function	Substitute
2/2 NC	A
2/2 NO	B
3/2 NC	C

Exhaust port only	Substitute
PTF	A
ISO G parallel (standard)	G

Operator	Substitute
Air pilot *1)	A
22 mm miniature solenoid	C

*1) To order air pilot models also substitute 'NNN' at digits 8, 9 and 10 e.g. P74A-NGA-NNN.

Connector	Substitute
With	A
Without	N

Coil voltage	Substitute
24 V d.c.	F
12 V d.c.	E
220/240 V a.c.	B
110/120 V a.c.	A
No coil	Z
No solenoid	N

Manual override	Substitute
Push only, spring return	P
Without	N

Voltage codes and spare coils

22 mm coil for connector interface acc. to industrial standard

Voltage	Power Inrush/Hold	Model	Code
12 V d.c.	2 W	QM/48/12J/21	12J
24 V d.c	2 W	QM/48/13J/21	13J
110/120 V 50/60 Hz	2,5 VA	QM/48/18J/21	18J
220/240 V 50/60 Hz	5,0 VA	QM/48/19J/21	19J

Connector plugs

Industrial standard 22 mm 2-pole + PE

0657868000000000

Accessories

Wall mounting bracket	Quikclamp®	Quikclamp with wall bracket®	Quikmount pipe adaptor *1)	Porting block with three alternative 1/4" ports	2/2 Shut-off valves (for full technical specification see datasheet 8.200.600)	3/2 Shut-off valves (for full technical specification see datasheet 8.200.600)
		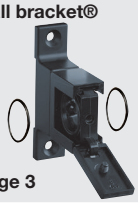				
Page 4	Page 3	Page 3	Page 3	Page 3	Page 4	Page 4
4324-50	4314-51	4314-52	G3/8: 4315-10	G1/4: 4316-52	G 3/8: T74B-3GA-P1N	G 3/8: T74T-3GA-P1N
			G1/2: 4315-11	1/4 PTF: 4316-50	G 1/2: T74B-4GA-P1N	G 1/2: T74T-4GA-P1N
			G3/4: 4315-12		G 3/4: T74B-6GA-P1N	G 3/4: T74T-6GA-P1N
			3/8 PTF: 4315-02			
			1/2 PTF: 4315-03			1/2 PTF: T74T-4AA-P1N
			3/4 PTF: 4315-04		3/4 PTF: T74B-6AA-P1N	3/4 PTF: T74T-6AA-P1N

*1) Please use a Quikmount pipe adaptor if the Quikclamp be mounted at inlet or outlet side.

Pressure switch

Porting block for pressure switch *1)	Pressure switch (0,5 ... 8 bar)	Connector DIN EN 175301-803 Form A
Page 4		
0523110000000000	0881300000000000	0570110000000000

*1) Pressure switch is not in scope of delivery

Silencer

Page 4

R1/2: MB004B

1/2 NPT: MB004A

Service kits

Service kit

53474-37

53474-40 (P74C)

Our policy is one of continued research and development. We therefore reserve the right to amend, without notice, the specifications given in this document. (1998 - 8065d) © 2014 Norgren Ltd

Drawings

Dimensions in mm
Projection/First angle

1

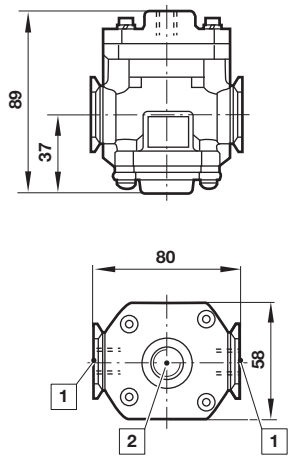

2

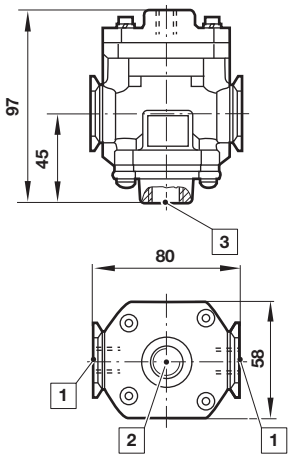

3

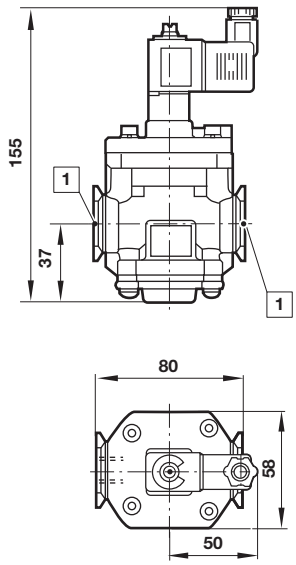

4

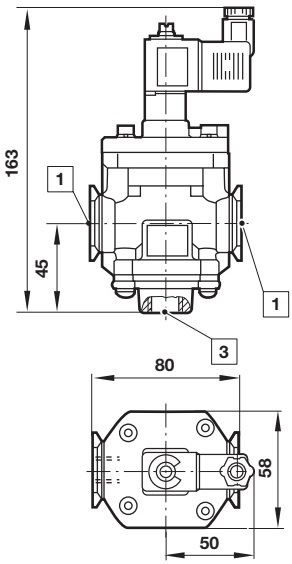

1 Unthreaded main port 1/2”
2 Pilot port 1/4”
3 Exhaust port 1/2”

Accessories

Quikclamp®

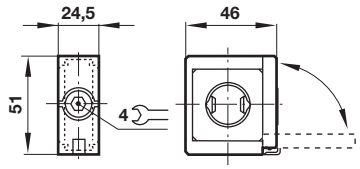

Quikclamp® with wall bracket

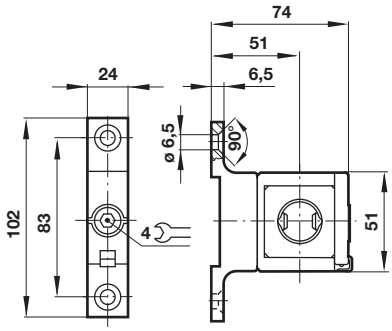

Porting block

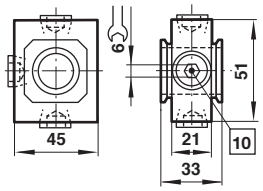

10 Ports 1/4” ISO G/PTF plugged

Pipe adapter

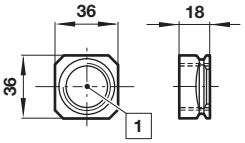

1 Main ports 3/8”, 1/2” or 3/4” ISO G/PTF

Our policy is one of continued research and development. We therefore reserve the right to amend, without notice, the specifications given in this document. (1998 - 8065d) © 2014 Norgren Ltd

Wall mounting bracket

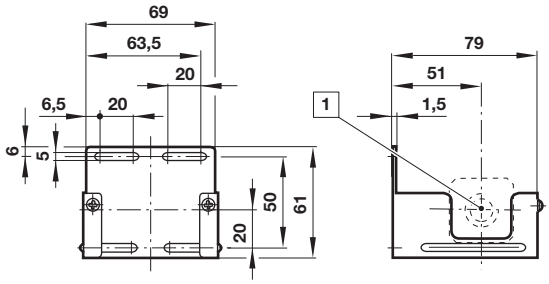

1 Main ports

Shut-off valves

Dimensions in mm
Projection/First angle

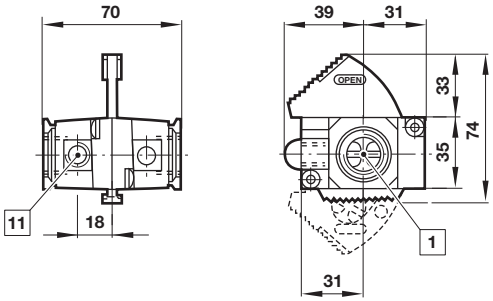

1 Main ports 3/8", 1/2" or 3/4" ISO G/PTF
11 Exhaust port Rc1/8 at 3/2 valve only

Porting block for pressure switch

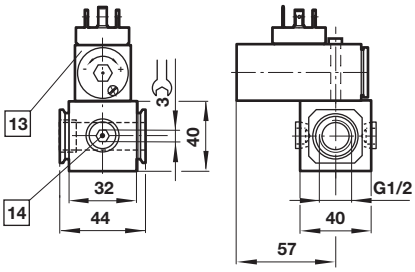

13 Pressure switch is not in scope of delivery
14 Alternative G1/4 ports plugged

Silencer

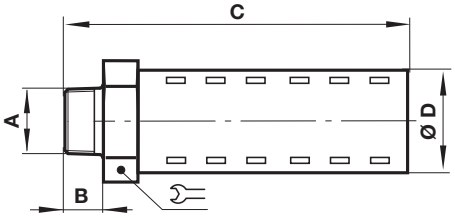

A	B	C	D		Model
R1/2	17	92	32	32	MB004B
1/2 NPT	17	92	32	32	MB004A

Warning

These products are intended for use in industrial compressed air systems only. Do not use these products where pressures and temperatures can exceed those listed under »**Technical features/data**«.
Before using these products with fluids other than those specified, for non-industrial applications, life-support systems or other applications not within published specifications, consult
IMI Precision Engineering, Norgren Inc.

Through misuse, age, or malfunction, components used in fluid power systems can fail in various modes. The system designer is warned to consider the failure modes of all component parts used in fluid power systems and to provide adequate safeguards to prevent personal injury or damage to equipment in the event of such failure.
System designers must provide a warning to end users in the system instructional manual if protection against a failure mode cannot be adequately provided.
System designers and end users are cautioned to review specific warnings found in instruction sheets packed and shipped with these products.

Our policy is one of continued research and development. We therefore reserve the right to amend, without notice, the specifications given in this document. (1998 - 8065d) © 2014 Norgren Ltd

P84C 3/2 Control Valve
Excelon® Plus Modular System

- **Port size: 3/8" ... 3/4" (ISO G/PTF)**
- **Excelon® Plus design allows in-line installation or modular installation with other Excelon® Plus products**
- **High forward flow capacity**
- **Fast Exhausting**
- **3 port/2 position valve, normally closed**
- **Solenoid and air pilot options**
- **For use as components in safety-related systems according to DIN EN ISO13849 up to a Performance Level (PL)c Cat. 1**
  Safety function: Safe Venting.

Technical features

Medium:
Compressed air only
Maximum supply pressure:
10 bar (145 psi)
Minimum operating pressure:
3 bar (43 psi)
Port size:
G3/8, G1/2, G3/4,
3/8 PTF, 1/2 PTF, 3/4 PTF

Flow:
58 dm³/s at port size 1/2"
Full flow P1 to P2 at 6,3 bar (91 psi) inlet, with 0,5 bar (7 psi) pressure drop
P2 to P3 = 63 dm³/s.

Ambient/Media temperature:
-20 ... +65°C (-4 ... +149°F)
Air supply must be dry enough to avoid ice formation at temperatures below +2°C (+35°F).

Materials:
Body: Aluminium
End Caps: Aluminum
Body covers: ABS
Elastomers: NBR
Valve: Brass
Air Pilot: Aluminium

Technical data P84C

Symbol	Port Size	Function	Voltage	Exhaust Port	Weight (kg)	Model
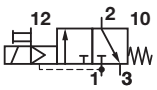	G3/8	Solenoid/spring	24 V d.c.	G1/2	1,0	P84C-3GT-PFN
	G1/2	Solenoid/spring	24 V d.c.	G1/2	1,0	P84C-4GT-PFN
	G3/4	Solenoid/spring	24 V d.c.	G1/2	1,0	P84C-6GT-PFN
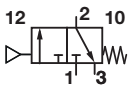	G3/8	Air/spring	N/A	G1/2	1,0	P84C-3GA-NNN
	G1/2	Air/spring	N/A	G1/2	1,0	P84C-4GA-NNN
	G3/4	Air/spring	N/A	G1/2	1,0	P84C-6GA-NNN

Electrical details for solenoid operators

Voltage tolerance:	-10%/+15%
Rating:	100% continuous duty
Inlet orifice:	0,8mm
Electrical connection:	15mm DIN EN 175301-803 (DIN 43650) Form C
Manual override:	Shrouded push button, spring return
Protection class:	IP65
Materials:	PP5 (body), NBR (seals)

Our policy is one of continued research and development. We therefore reserve the right to amend, without notice, the specifications given in this document. (2020-9331a) © 2015 Norgren Ltd.

Option selector

P84C-★★★ -★★N

Function	Substitute
3/2 Control Valve	C

Port Size	Substitute
3/8"	3
1/2"	4
3/4"	6

Thread Form	Substitute
PTF	A
ISO G	G

Voltage	Substitute
24 V d.c.	F
110 V a.c.	A
220 V a.c.	B
Non	N

Solendoid Operator	Substitute
Non-Locking push button	P
Non	N

Operator *2)	Substitute
Air pilot*1)	A
Solenoid Operated	T

Flow characteristics

Port 1 to 2
Port size: 1/2"

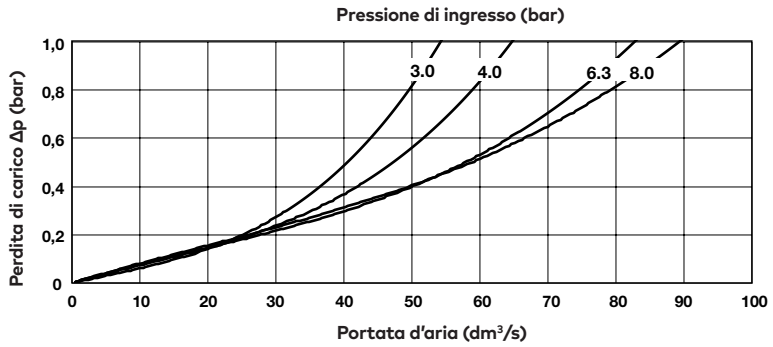

Port 1 to 2
Port size: 3/8"

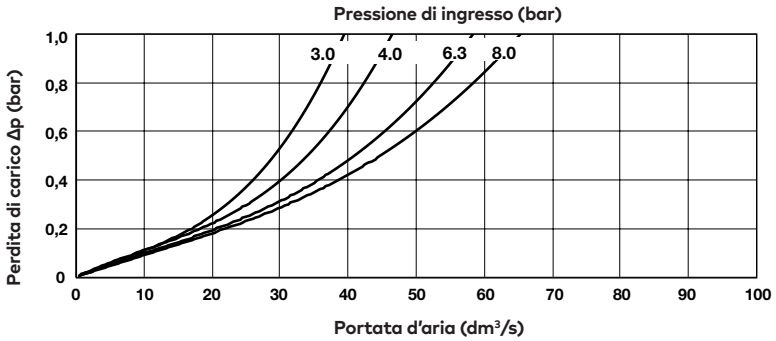

Our policy is one of continued research and development. We therefore reserve the right to amend, without notice, the specifications given in this document. (2020-9331a) © 2015 Norgren Ltd.

Accessories

Connection cable with plug,LED and M12 Female

Description	Cable length (m)	Model
PUR-Cable; M12/valve type C DIN connector	0,6	NC-DINCA-123MS-A
	1	NC-DINCA-123MS-1
	2	NC-DINCA-123MS-2
	5	NC-DINCA-123MS-5

Plug with with moulded cable and indicator

Voltage	Cable length (m)	Model
12 - 24 V a.c. / d.c	1	V10014-D01
12 - 24 V a.c. / d.c	3	V10014-D03
110 V a.c. / d.c.	1	V10015-D01
110 V a.c. / d.c.	3	V10015-D03
220 V a.c. / d.c	1	V10016-D01
220 V a.c. / d.c	3	V10016-D03

Plug with moulded cable

Description	Cable length (m)	Model
3 pin plug with moulded cable	1	V10013-D01
3 pin plug with moulded cable	3	V10013-D03

Light Emitting Seals ,15mm form C

Description	Model
Light Emitting Seals Circuit A (12 - 24 V d.c.)	V10037-E13
Light Emitting Seals Circuit B (110 - 120 V a.c.)	V10037-E18
Light Emitting Seals Circuit B (220 - 240 V a.c.)	V10037-E19

Plug with cable gland and indicator

Description	Model
Plug with cable gland and indicator 12-24 V a.c. / d.c., c/w LED / VDR	V10012-D13
Plug with cable gland and indicator 110 V a.c. / d.c., c/w LED / VDR	V10012-D18
Plug with cable gland and indicator 220 V a.c. / d.c., c/w LED / VDR	V10012-D19

M12 Adaptor Rear - MSUP Valve Plug Form C 8MM

V13981-E01

M12 Adaptor Top - MSUP Valve Plug Form C 8MM

V13980-E01

Plug with cable gland

V10027-D00

Our policy is one of continued research and development. We therefore reserve the right to amend, without notice, the specifications given in this document. (2020-9331a) © 2015 Norgren Ltd.

Accessories

Quikclamp®

Page 7

840014-51KIT

Quikclamp® with bracket assembled

Page 7

840014-52KIT

Pressure sensing block 1/4 PTF

Page 7

840016-50KIT

Pressure sensing block G1/4

Page 7

840016-51KIT

Port Adaptors

Page 8

1/4 PTF	840015-01KIT
3/8 PTF	840015-02KIT
1/2 PTF	840015-03KIT
3/4 PTF	840015-04KIT
G1/4	840015-09KIT
G3/8	840015-10KIT
G1/2	840015-11KIT
G3/4	840015-12KIT

Hybrid Quikclamp® *1

Page 7

840014-61

Hybrid Quikclamp® with bracket assembled *1

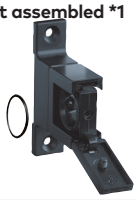

Page 7

840014-62

*1) To connect new Excelon Plus to old Excelon 74/73 units. Having the same hole centres as 74 series mounting bracket.
A Quikclamp adds 13.6 mm to the overall width of a combination unit

Full flow porting block 3/4" PTF

Page 8

840028-50KIT

Full flow porting block G3/4

Page 8

840028-53KIT

Full flow porting block 3/4" PTF

Page 8

840028-50KIT

Full flow porting block G3/4

Page 8

840028-53KIT

Pressure switch interface block (18D pressure switch) G1/4

Page 8

0337717000000000

Pressure switch 18D (0,5 ... 8bar) *1

Page 8

0881300

Digital pressure switch 51D (-1 ... 10 bar) *2

Page 9

0860810

Electronic Pressure Sensor – stand alone version *3

Q84G

Silencer

Heavy duty muffler, 1/2" NPT male thread, brass wire element

MB004A

Heavy duty muffler, R1/2 male thread, brass wire element

MB004B

*1) Flanged version. For other pressure ranges, please see data sheet 5.11.001
*2) For other pressure ranges, please see data sheet 5.11.385

*3) **Voltage rating and spare coils**

	Voltage	Power	Replacement
	24 V d.c.	1,2 W	840650-50KIT
	110 V a.c.	1,5 VA	840650-51KIT
	220 V a.c.	1,5 VA	840650-52KIT

Our policy is one of continued research and development. We therefore reserve the right to amend, without notice, the specifications given in this document. (2020-9331a) © 2015 Norgren Ltd.

Dimensions

Dimensions in mm
Projection/First angle

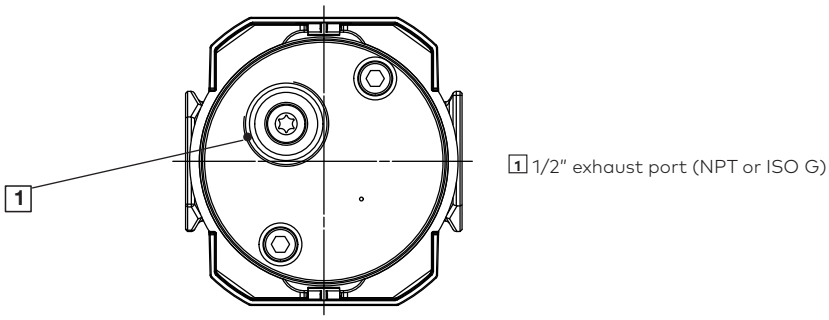

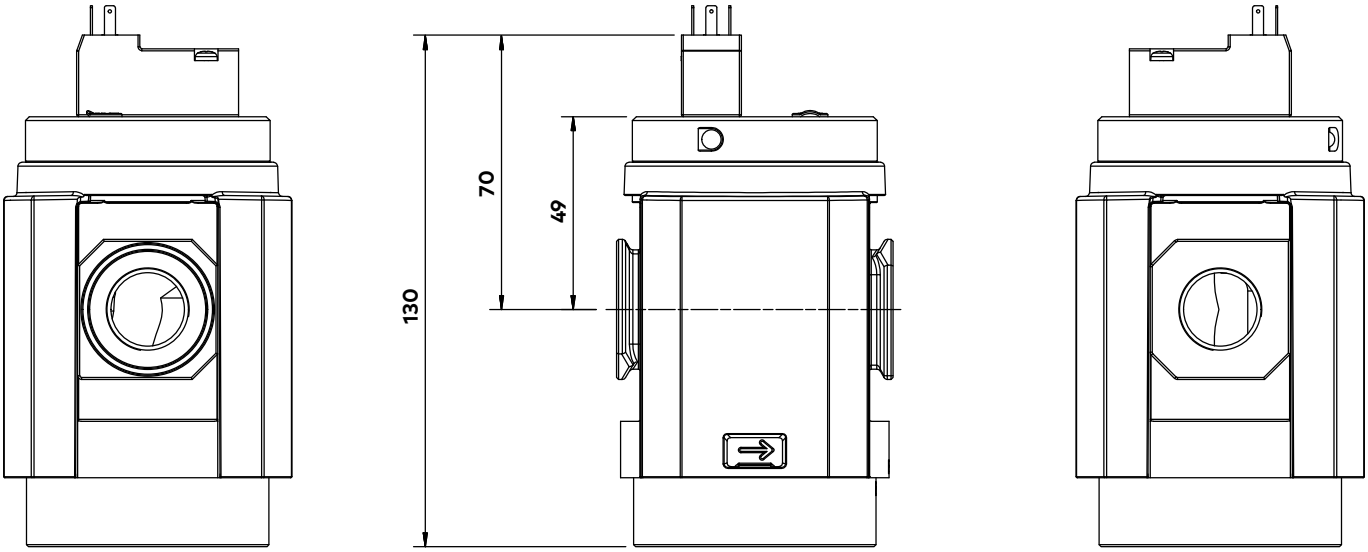

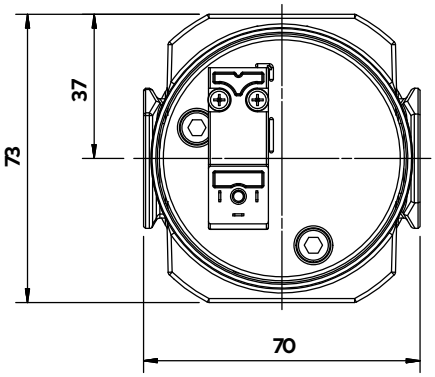

Our policy is one of continued research and development. We therefore reserve the right to amend, without notice, the specifications given in this document. (2020-9331a) © 2015 Norgren Ltd.

Dimensions

Air Pilot Operator

Dimensions in mm
Projection/First angle

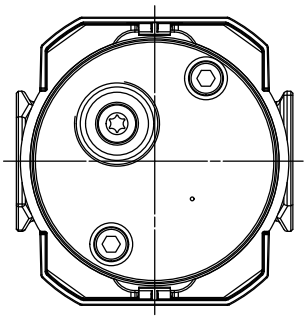

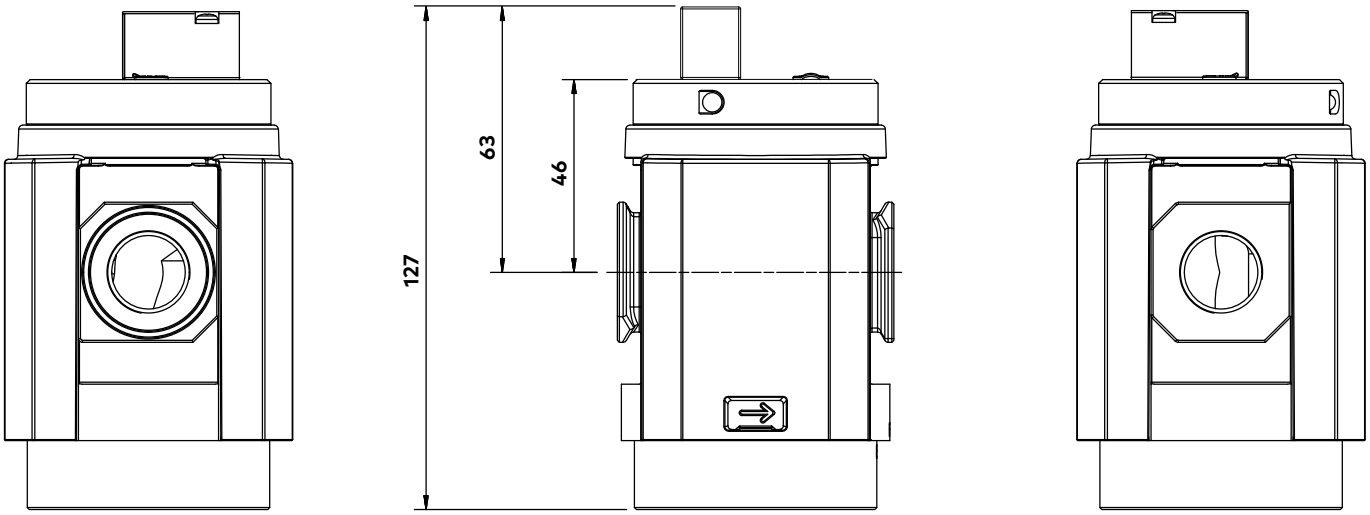

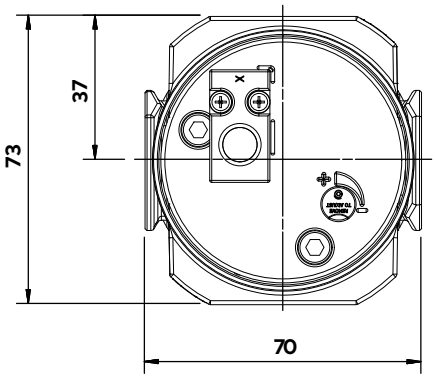

Our policy is one of continued research and development. We therefore reserve the right to amend, without notice, the specifications given in this document. (2020-9331a) © 2015 Norgren Ltd.

Accessories

Dimensions in mm
Projection/First angle

Quikclamp® with wall bracket

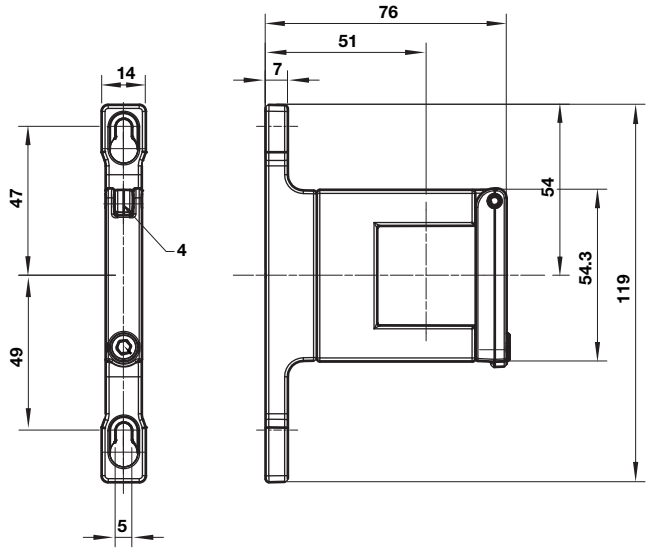

Quikclamp®

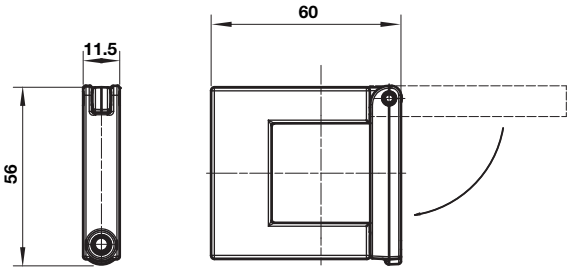

Hybrid-Quikclamp® with wall bracket

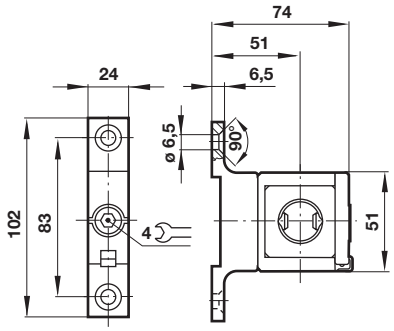

Hybrid-Quikclamp®

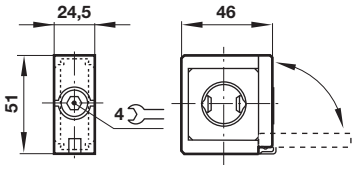

Pressure sensing block

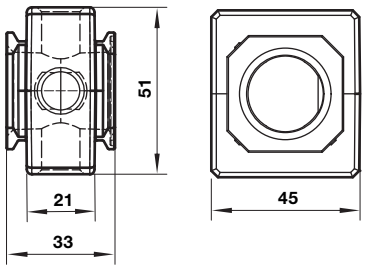

Our policy is one of continued research and development. We therefore reserve the right to amend, without notice, the specifications given in this document. (2020-9331a) © 2015 Norgren Ltd.

Full flow porting block horizontal

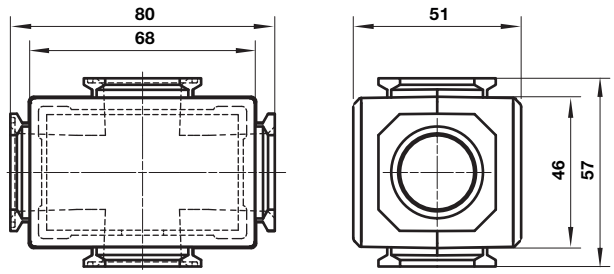

Full flow porting block vertical

Dimensions in mm
Projection/First angle

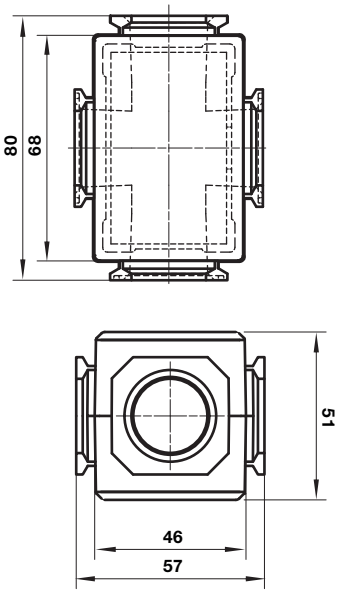

Porting block for 18D pressure switch

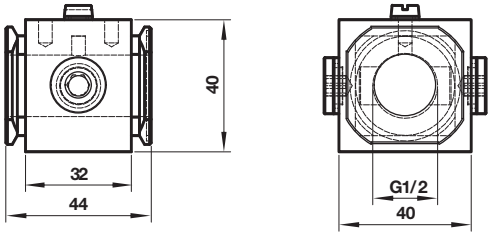

18D Pressure switch

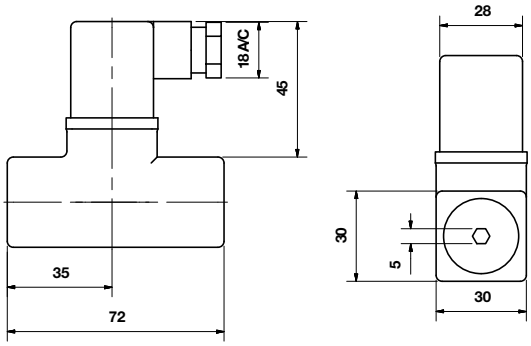

18D Porting block and 18D assembled

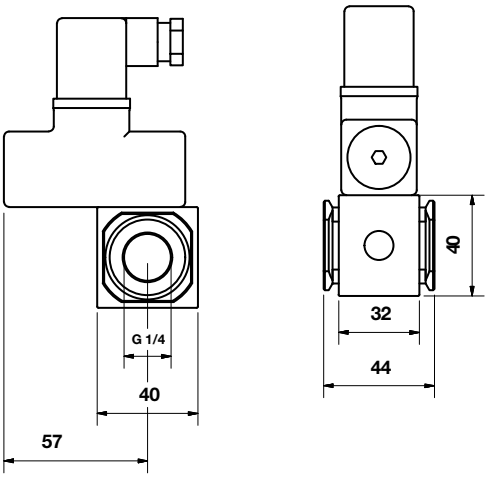

Pipe adaptor

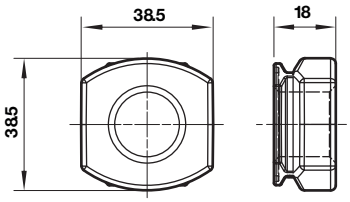

Our policy is one of continued research and development. We therefore reserve the right to amend, without notice, the specifications given in this document. (2020-9331a) © 2015 Norgren Ltd.

51D Pressure switch - digital

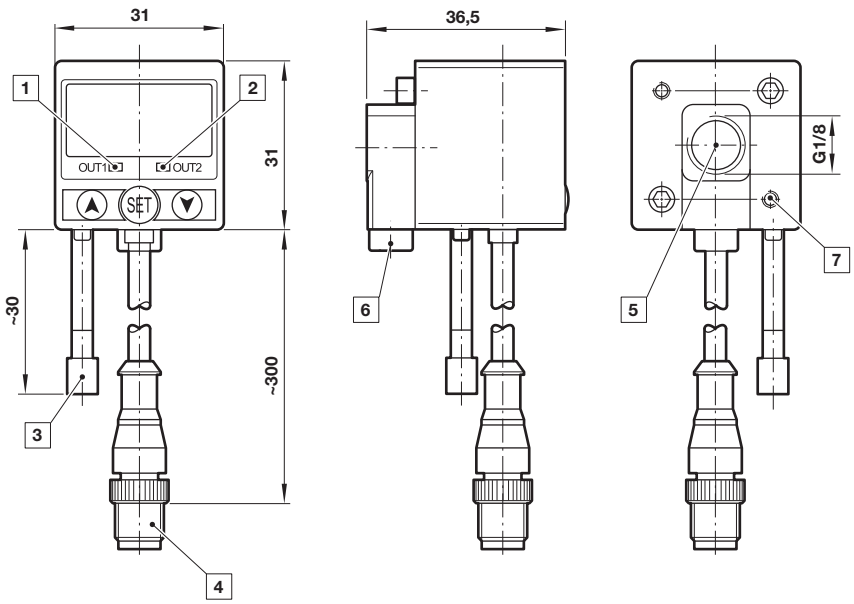

1 Switch OUT 1, green LED
2 Switch OUT 2, red LED
3 Dustproof protector
4 Connector M12 x 1
5 Inlet port
6 Alternative inlet port G1/8 plugged
7 Thread for mounting screw

Silencer

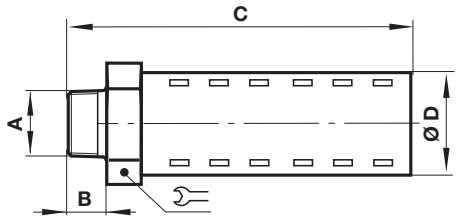

A	B	C	D		Model
R1/2	17	92	32	32	MB004B
1/2 NPT	17	92	32	32	MB004A

Warning

These products are intended for use in industrial compressed air systems only. Do not use these products where pressures and temperatures can exceed those listed under »**Technical features/ data**«.
Before using these products with fluids other than those specified, for non-industrial applications, life-support systems or other applications not within published specifications, consult Norgren Ltd.

Through misuse, age, or malfunction, components used in fluid power systems can fail in various modes.

The system designer is warned to consider the failure modes of all component parts used in fluid power systems and to provide adequate safeguards to prevent personal injury or damage to equipment in the event of such failure.
System designers must provide a warning to end users in the system instructional manual if protection against a failure mode cannot be adequately provided.
System designers and end users are cautioned to review specific warnings found in instruction sheets packed and shipped with these products.

Our policy is one of continued research and development. We therefore reserve the right to amend, without notice, the specifications given in this document. (2020-9331a) © 2015 Norgren Ltd.

- **Port size: 3/8" ... 3/4" (ISO G/PTF)**
- **Assists machine designers in complying with the European Machineries Directive**
- **Excelon design allows in-line installation or modular installation with other Excelon products**
- **Can help existing machinery to comply with PUWER (Provision and Use of Work Equipment Regulations)**
- **Controlled increase of downstream pressure onstart up**
- **High forward flow capacity**
- **High flow dump facility**

Technical features

Medium:
Compressed air only
Operating pressure:
Solenoid actuated:
3 ... 10 bar (44 ... 145 psi)
Pilot actuated:
3 ... 17 bar (44 ... 250 psi)
Snap pressure:
Full flow when downstream pressure reaches 50 – 80% of inlet pressure
Charge time:
For 2 litre downstream volume and 6,3 bar (90 psi) inlet pressure
0,2 sec. minimum
110 sec. maximum

Port size:
G3/8, G1/2, G3/4,
3/8 PTF 1/2 PTF , 3/8 PTF
Pilot port:
Rc1/4 with ISO G main ports
1/4 PTF with PTF main ports
Exhaust port:
G1/2 with ISO G main ports
1/2 PTF with PTF main ports
Flow:
57 dm^3/s
Operating pressure: 6,3 bar (91 psi)
Δp: 0,5 bar (7 psi)
P1 » P2 = Cv 4,4; P2 » P3 = Cv 5,6

Ambient/Media temperature:
Solenoid actuated:
-20° ... +50°C (-4° ... +122°F)
Pilot actuated:
-20° ... +80°C (+4° ... +176°F)
Air supply must be dry enough to avoid ice formation at temperatures below +2°C (+35°F).

Materials:
Body & intermediate body: Aluminium
Elastomers: Synthetic materials
Filter discs: Sintered plastic
Internal components: Brass/steel
Top plate & exhaust bonnet: Zinc

Electrical details for solenoid operators

Voltage tolerance	± 10%
Rating	100% continuous duty
Inlet orifice	1,0 mm
Electrical connection	Industrial Standard, 22 mm
Solenoid coil mounting	Four positions x 90°
Protection class	IP 65 (with sealed plug)

Technical data - standard models

Symbol	Port size	Size	Actuation/ return	Voltage	Pilot port	Weight (kg)	Typ
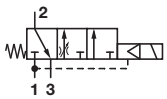	G3/8	—	Solenoid/spring	24 V d.c.	-	1,08	P74F-3GC-PFA *1)
	G1/2	Basic	Solenoid/spring	24 V d.c.	-	1,05	P74F-4GC-PFA *1)
	G3/4	—	Solenoid/spring	24 V d.c.		1,41	P74F-6GC-PFA *1)
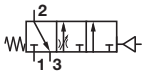	G3/8	—	Air/spring	–	M5	1,05	P74F-3GA-NNN
	G1/2	Basic	Air/spring	–	M5	1,02	P74F-4GA-NNN
	G3/4	—	Air/spring		M5	1,35	P74F-6GA-NNN

*1) To select other solenoid type and coil voltage refer to option selector on page 2

Voltage codes and spare coils

22 mm coil for connector interface acc. to industrial standard

	Voltage	Power Inrush/Hold	Model	Code
	12 V d.c.	2 W	QM/48/12J/21	12J
	24 V d.c	2 W	QM/48/13J/21	13J
	110/120 V 50/60 Hz	4/2,5 VA	QM/48/18J/21	18J
	220/240 V 50/60 Hz	6/5,0 VA	QM/48/19J/21	19J

Connector plugs

Industrial standard 22 mm 2-pole + PE

0657868

Our policy is one of continued research and development. We therefore reserve the right to amend, without notice, the specifications given in this document. (2000 - 5166c) © 2015 IMI International s.r.o.

Option selector

P74F-···-···

Port size	Substitute
3/8"	3
1/2"	4
3/4"	6

Thread size	Substitute
PTF	A
ISO G parallel (standard)	G

Operator	Substitute
Air pilot*1)	A
Air pilot with manual lockout slide* 1)	B
22 mm miniature solenoid	C
22 mm miniature solenoid with manual lockout slide	D
CNOMO solenoid	L
CNOMO solenoid with manual lockout slide	M

*1)To order air pilot models also substitute 'NNN' at digits 8, 9 and 10 e.g. P74F-2GA-NNN.

Connector	Substitute
With	A
Without	N

Coil voltage	Substitute
24 V d.c.	F
12 V d.c.	E
220/240 V a.c.	B
110/120 V a.c.	A
No coil	Z
No solenoid	N

Manual override	Substitute
Shrouded push button	P
No solenoid	N

Flow characteristics

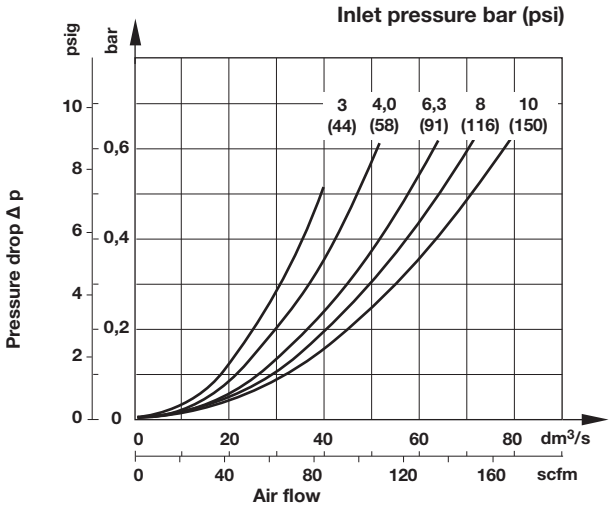

Charge time

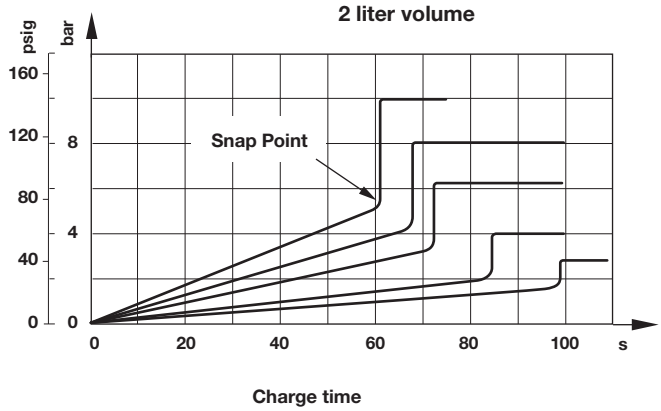

Our policy is one of continued research and development. We therefore reserve the right to amend, without notice, the specifications given in this document. (2000 - 5166c) © 2015 IMI International s.r.o.

Accessories

Wall mounting bracket	Quikclamp®	Quikclamp with wall bracket®	Quikmount pipe adaptor *1)	Porting block with three alternative 1/4" ports	2/2 Shut-off valves (for full technical specification see datasheet 8.200.600)	3/2 Shut-off valves (for full technical specification see datasheet 8.200.600)
Page 4	Page 4	Page 4	Page 4	Page 4	Page 4	Page 4
4324-50	4314-51	4314-52	G3/8: 4315-10	G1/4: 4316-52	G 3/8: T74B-3GA-P1N	G 3/8: T74T-3GA-P1N
			G1/2: 4315-11	1/4 PTF: 4316-50	G 1/2: T74B-4GA-P1N	G 1/2: T74T-4GA-P1N
			G3/4: 4315-12		G 3/4: T74B-6GA-P1N	G 3/4: T74T-6GA-P1N
			3/8 PTF: 4315-02			
			1/2 PTF: 4315-03			1/2 PTF: T74T-4AA-P1N
			3/4 PTF: 4315-04		3/4 PTF: T74B-6AA-P1N	3/4 PTF: T74T-6AA-P1N

*1) Please use a Quikmount pipe adaptor if the Quikclamp be mounted at inlet or outlet side.

Pressure switch

Porting block for pressure switch	Pressure switch (0,5 ... 8 bar)
Page 4	
0523110000000000	0881300000000000

Padlock

Padlock (brass) with two keys *1)
0613633000000000

*1) for shut-off valves

Silencer

Silencer
Page 4
R1/2: MB004B
1/2 NPT: MB004A

Drawings

Dimensions in mm
Projection/First angle

Air pilot actuated

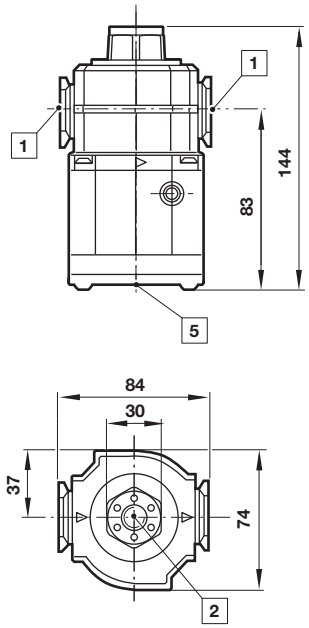

Air actuated plus manual lockput slide

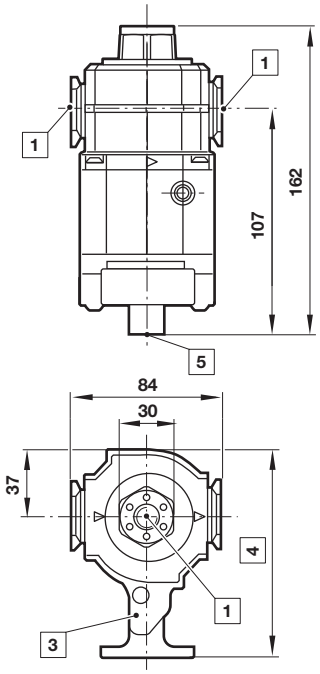

Solenoid actuated

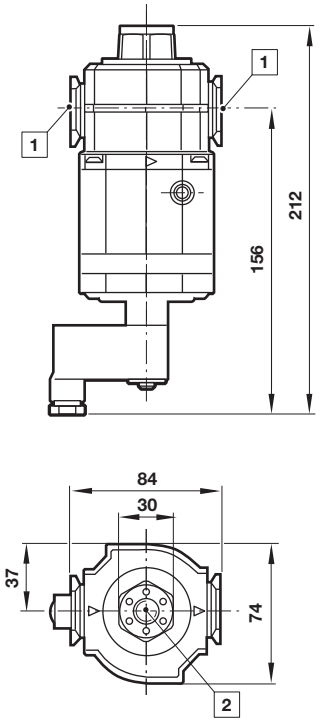

Solenoid actuated plus manual lockput slide

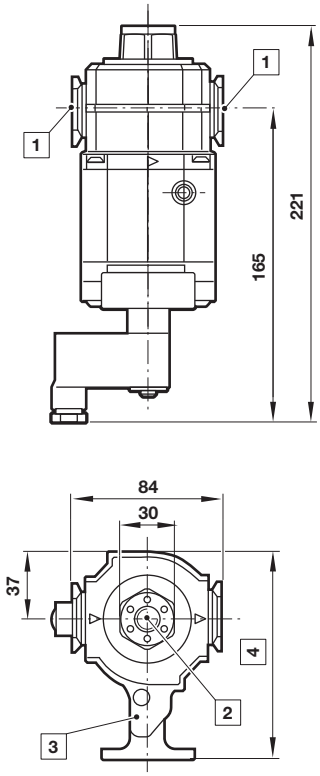

1 Main ports 3/8", 1/2" or 3/4"
2 Pilot port
3 Manual lockout slide
4 Minimum 96 mm; maximum 111 mm
5 Exhaust port

Our policy is one of continued research and development. We therefore reserve the right to amend, without notice, the specifications given in this document. (2000 - 5166c) © 2015 IMI International s.r.o.

Accessories

Dimensions in mm
Projection/First angle

Quikclamp®

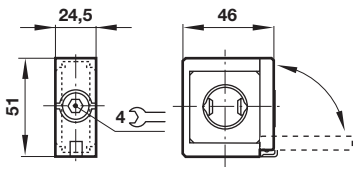

Quikclamp® with wall bracket

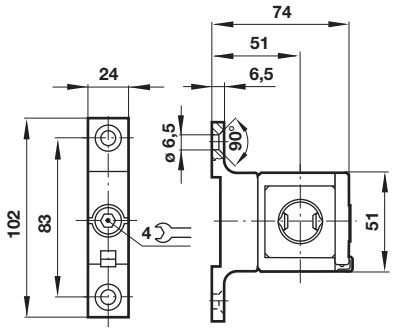

Porting block

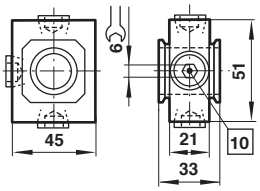

10 Ports 1/4" ISO G/PTF plugged

Pipe adapter

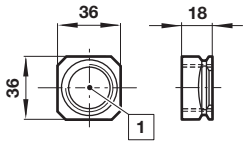

1 Main ports 3/8", 1/2" or 3/4" ISO G/PTF

Wall mounting bracket

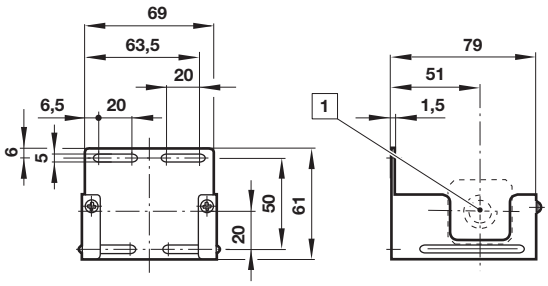

1 Main ports

Shut-off valves

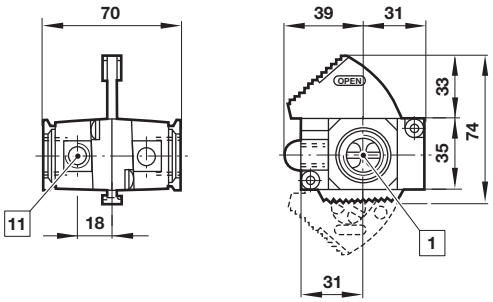

1 Main ports 3/8", 1/2" or 3/4" ISO G/PTF
11 Exhaust port Rc1/8

Porting block for pressure switch

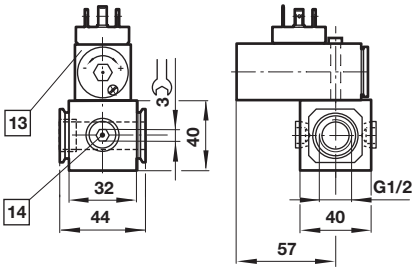

13 Pressure switch is not in scope of delivery
14 Alternative G1/4 ports plugged

Silencer

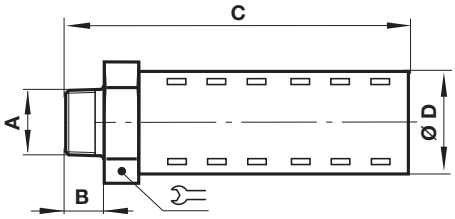

A	B	C	D		Model
R1/2	17	92	32	32	MB004B
1/2 NPT	17	92	32	32	MB004A

Warning

These products are intended for use in industrial compressed air systems only. Do not use these products where pressures and temperatures can exceed those listed under **»Technical features/data«**.
Before using these products with fluids other than those specified, for non-industrial applications, life-support systems or other applications not within published specifications, consult IMI Precision Engineering, Norgren GmbH.
Through misuse, age, or malfunction, components used in fluid power systems can fail in various modes.

The system designer is warned to consider the failure modes of all component parts used in fluid power systems and to provide adequate safeguards to prevent personal injury or damage to equipment in the event of such failure.
System designers must provide a warning to end users in the system instructional manual if protection against a failure mode cannot be adequately provided.
System designers and end users are cautioned to review specific warnings found in instruction sheets packed and shipped with these products.

Our policy is one of continued research and development. We therefore reserve the right to amend, without notice, the specifications given in this document. (2000 - 5166c) © 2015 IMI International s.r.o.

- **Port size: 1/4” or 3/8” (ISO G/NPT)**
- **Excelon design allows in-line installation or modular installation with other Excelon products**
- **3/2 valves, normally closed**
- **Solenoid or air pilot operated**
- **Customised poppets for long service life**
- **High flow**

Technical features

Medium:
Compressed air only
Maximum pressure solenoid operated:
Dependant on solenoid rating [must not exceed 10 bar (150 psi)]
Maximum pressure pilot operated: 10 bar (150 psi)
Minimum operating pressure: 3 bar (44 psi)

Air Pilot Port:
M5 with ISO G main ports
10-32 UNF with PTF main ports
Exhaust Port:
Rc1/4 with ISO G main ports
1/4 PTF with PTF main ports
Average flow factor (Cv):
IN to OUT ports: 1,31
OUT to EXHAUST ports: 1,27

Ambient/Media temperature:
Solenoid operated:
-20 ... +65°C (+4 ... +149°F)
Maximum temperature for solenoid operated valves is depending on the solenoid rating, but must not exceed +65°C (+149°F)
Pilot operated
-20 ... +65°C (+4 ... +149°F)
Air supply must be dry enough to avoid ice formation at temperatures below +2°C (+35°F).

Materials:
Body: Zinc alloy
Elastomers: Synthetic materials
Filter discs: Sintered plastic
Internal components: Brass/steel

Electrical details for solenoid operators

Voltage tolerance	± 10%
Rating	100% continuous duty
Inlet orifice	1,0 mm
Electrical connection	Industrial Standard, 22 mm
Solenoid coil mounting	Four positions x 90°
Protection class	IP 65 (with sealed plug)

Technical data - standard models

Symbol	Port size	Size	Actuation/ return	Voltage	Weight (kg)	Model
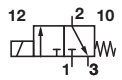	G 1/4	Basic	Solenoid/spring	24 V d.c.	0,96	P72C-2GC-PFN *1)
	G 3/8		Solenoid/spring	24 V d.c.	0,93	P72C-3GC-PFN *1)
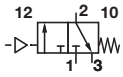	G 1/4	Basic	Air/spring	–	0,84	P72C-2GA-NNN
	G 3/8		Air/spring	–	0,82	P72C-3GA-NNN

*1) To select other solenoid type and coil voltage refer to option selector on page 2

Voltage codes and spare coils

22 mm coil for connector interface acc. to industrial standard

	Voltage	Power Inrush/Hold	Model	Code
	12 V d.c.	2 W	QM/48/12J/21	12J
	24 V d.c	2 W	QM/48/13J/21	13J
	110/120 V 50/60 Hz	4/2,5 VA	QM/48/18J/21	18J
	220/240 V 50/60 Hz	6/5,0 VA	QM/48/19J/21	19J

Connector plugs

Industrial standard 22 mm 2-pole + PE

0657868

Our policy is one of continued research and development. We therefore reserve the right to amend, without notice, the specifications given in this document. (1998 - 8039c) © 2015 IMI International s.r.o.

Option selector

P72C-★★★-★★★

Port size	Substitute
1/4"	2
3/8"	3
Thread size	**Substitute**
ISO G (standard)	G
PTF	A
Operator	**Substitute**
Air pilot *1)	A
22 mm miniature solenoid	C
CNOMO	L

*1)To order air pilot models also substitute 'NNN' at digits 8, 9 and 10 e.g. P72C-2GA-NNN.

Connector plugs	Substitute
With	A
Without	N
Coil voltage	**Substitute**
24 V d.c.	F
12 V d.c.	E
220/240 V a.c.	B
110/120 V a.c	A
No coil	Z
No solenoid	N
Solenoid operator	**Substitute**
With	P
No solenoid	N

Accessories

Wall mounting bracket	Quikclamp®	Quikclamp with wall bracket®	Quikmount pipe adaptor *1)	Porting block with three alternative 1/4" ports	2/2 Shut-off valves (for full technical specification see datasheet 8.160.600)	3/2 Shut-off valves (for full technical specification see datasheet 8.160.600)
Page 3	**Page 3**	**Page 3**	**Page 3**	**Page 3**	**Page 3**	**Page 3**
4224-50	4214-51	4214-52	G1/4: 4215-08	G1/4: 4216-52	G1/4: T72B-2GA-P1N	G1/4: T72T-2GA-P1N
			G3/8: 4215-09	1/4 PTF: 4216-50	G3/8: T72B-3GA-P1N	G3/8: T72T-3GA-P1N
			1/4 PTF: 4215-02		1/4 PTF: T72B-2AA-P1N	1/4 PTF: T72T-2AA-P1N
			3/8 PTF: 4215-03		3/8 PTF: T72B-3AA-P1N	3/8 PTF: T72T-3AA-P1N

*1) Please use a Quikmount pipe adaptor if the Quikclamp be mounted at inlet or outlet side.

Pressure switch

Porting block for pressure switch	Pressure switch (0,5 ... 8 bar)
0523109000000000	0881300000000000

Padlock

Padlock (brass) with two keys *1)
0613633000000000

*1) for shut-off valves

Silencer
Page 3
R1/4: MB002B
1/4 PTF: MB002A

Our policy is one of continued research and development. We therefore reserve the right to amend, without notice, the specifications given in this document. (1998 - 8039c) © 2015 IMI International s.r.o.

Drawings

Dimensions in mm
Projection/First angle

Solenoid actuated

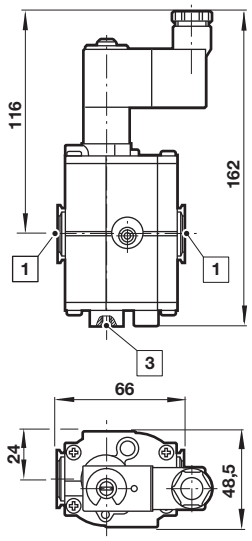

Air pilot actuated

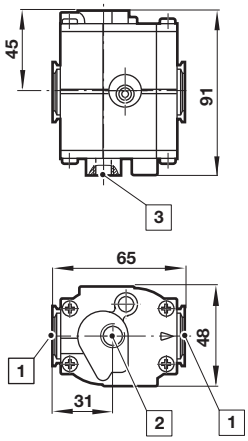

1 Main ports 1/4" or 3/8"
2 Pilot port
3 Exhaust port

Accessories
Quikclamp®

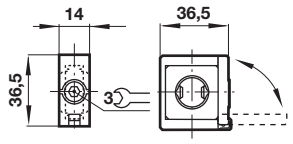

Quikclamp® with wall bracket

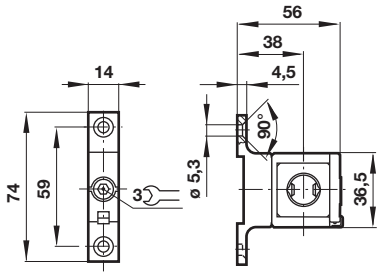

Porting block

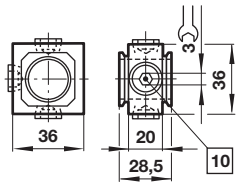

10 Ports (G1/4 or 1/4 NPT) plugged

Pipe adapter

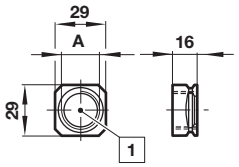

1 Main ports 1/4" or 3/8" ISO G/PTF

Wall mounting bracket

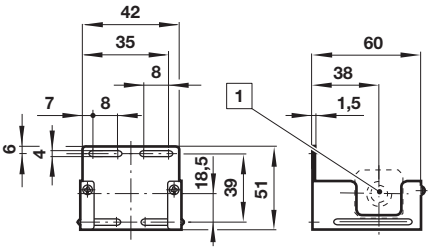

1 Main ports

Shut-off valves

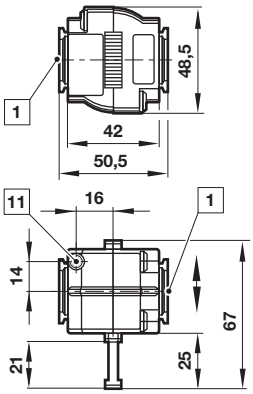

1 Main ports 1/4" or 3/8" ISO G/PTF
11 Exhaust port M5 at 3/2 valve only

Porting block for pressure switch

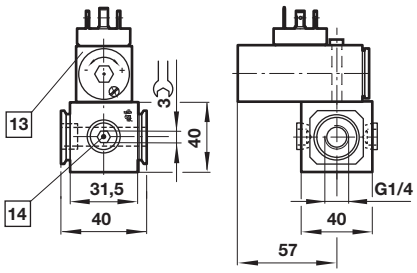

13 Pressure switch is not in scope of delivery
14 Alternative G1/4 ports plugged

Silencer

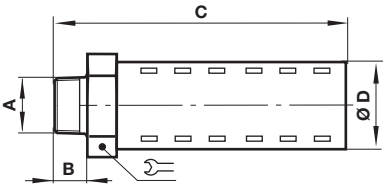

A	B	C	D		Model
R1/4	17	92	32	32	MB002B
1/4 NPT	17	92	32	32	MB002A

Warning

These products are intended for use in industrial compressed air systems only. Do not use these products where pressures and temperatures can exceed those listed under **»Technical features/data«**.
Before using these products with fluids other than those specified, for non-industrial applications, life-support systems or other applications not within published specifications, consult IMI Precision Engineering, Norgren Inc.
Through misuse, age, or malfunction, components used in fluid power systems can fail in various modes.

The system designer is warned to consider the failure modes of all component parts used in fluid power systems and to provide adequate safeguards to prevent personal injury or damage to equipment in the event of such failure.
System designers must provide a warning to end users in the system instructional manual if protection against a failure mode cannot be adequately provided.
System designers and end users are cautioned to review specific warnings found in instruction sheets packed and shipped with these products.

Our policy is one of continued research and development. We therefore reserve the right to amend, without notice, the specifications given in this document. (1998 - 8039c) © 2015 IMI International s.r.o.

- **Port size: 1/4” ... 1/2” (ISO G/PTF)**
- **Excelon design allows in-line installation or modular installation with other Excelon products**
- **T73B 2/2 valves no exhaust**
- **T73T 3/2 valves with M5 tapped exhaust**
- **T73E 3/2 position lockout valves help conform to OSHA Lockout regulations in USA market. Exhaust outlet is not tapped.**

Technical features

Medium:
Compressed air only
Maximum operating pressure:
17 bar (250 psi)
Port size:
G1/4, G3/8, G1/2,
1/4 PTF, 3/8 PTF 1/2 PTF

Exhaust port:
M5 for T73T models
CV factor:
From IN to OUT ports:
1/4”: 4,0; 3/8”: 8,0; 1/2”: 7,8;
0,2 from OUT to Exhaust ports on 3/2 valves

Ambient/Media temperature:
-34° ... +65°C (-30° ... +149°F)
Air supply must be dry enough to avoid ice formation at temperatures below +2°C (+35°F).

Materials:
Body: Zinc
Slide: Acetal plastic
Elastomers: NBR

Technical data - standard models

Symbol	Port size	Function	Size	Weight (kg)	Model
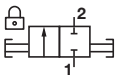	G1/4	2/2	—	0,30	T73B-2GA-P1N
	G3/8	2/2	Basic	0,30	T73B-3GA-P1N
	G1/2	2/2	—	0,30	T73B-4GA-P1N
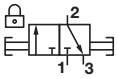	G1/4	3/2	—	0,30	T73T-2GA-P1N
	G3/8	3/2	Basic	0,30	T73T-3GA-P1N
	G1/2	3/2	—	0,30	T73T-4GA-P1N

Option selector

T73★-★★A-P1N

Function	Substitute
2/2 (Black slide locks in closed position only) No exhaust outlet	B
3/2 (Yellow slide locks in closed position only) Unthreaded exhaust outlet	E
3/2 (Red slide locks in closed position only) Threaded exhaust port	T

Thread form	Substitute
NPT	A
ISO G parallel (standard)	G
Thread size	**Substitute**
1/4”	2
3/8”	3
1/2”	4

Our policy is one of continued research and development. We therefore reserve the right to amend, without notice, the specifications given in this document. (2002 - 8050d) © 2015 Norgren Inc.

Accessories

Quikclamp®	Quikclamp with wall bracket®	Quikmount pipe adaptor *1)	Porting block with three alternative 1/4" ports	Silencer
4314-51	4314-52	G1/4: 4315-09	G1/4: 4316-52	M5: T40M0500
		G3/8: 4315-10	1/4 PTF: 4316-50	
		G1/2: 4315-11		
		1/4 PTF: 4315-01		
		3/8 PTF: 4315-02		
		1/2 PTF: 4315-03		

*1) Please use a Quikmount pipe adaptor if the Quikclamp be mounted at inlet or outlet side.

Pressure switch

Padlock

Porting block for pressure switch	Pressure switch (0,5 ... 8 bar)	Padlock (brass) with two keys *1)
0523110000000000	0881300000000000	0613633000000000

*1) for shut-off valves

Dimensions in mm
Projection/First angle

Drawing

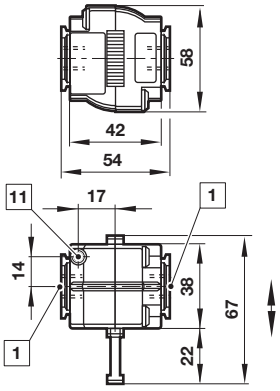

1 Main ports 1/4", 3/8" or 1/2" ISO G/PTF
11 Exhaust port M5 at 3/2 valve only

Accessories

Quikclamp® with wall bracket

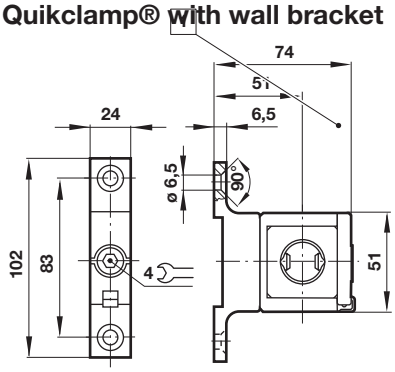

Porting block for pressure switch

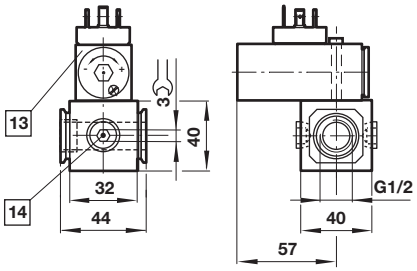

13 Pressure switch is not in scope of delivery
14 Alternative G1/4 ports plugged

Pipe adapter

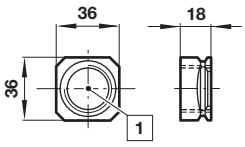

1 Main ports 3/8", 1/2" or 3/4" ISO G/PTF

Quikclamp®

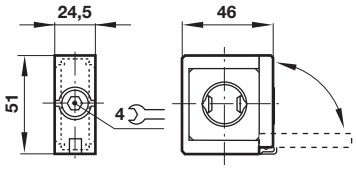

Porting block

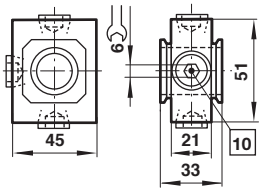

10 Ports 1/4" ISO G/PTF plugged

Silencer

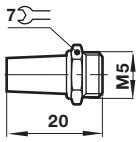

Warning

These products are intended for use in industrial compressed air systems only. Do not use these products where pressures and temperatures can exceed those listed under **»Technical features/data«**.
Before using these products with fluids other than those specified, for non-industrial applications, life-support systems or other applications not within published specifications, consult IMI Precision Engineering, Norgren Inc.
Through misuse, age, or malfunction, components used in fluid power systems can fail in various modes.

The system designer is warned to consider the failure modes of all component parts used in fluid power systems and to provide adequate safeguards to prevent personal injury or damage to equipment in the event of such failure.
System designers must provide a warning to end users in the system instructional manual if protection against a failure mode cannot be adequately provided.
System designers and end users are cautioned to review specific warnings found in instruction sheets packed and shipped with these products.

Our policy is one of continued research and development. We therefore reserve the right to amend, without notice, the specifications given in this document. (2002 - 8050d) © 2015 Norgren Inc.

- Port size: 1/4” or 3/8” (ISO G/NPT)
- Assists machine designers in complying with the European Machineries Directive
- Excelon design allows in-line installation or modular installation with other Excelon products
- Can help existing machinery to comply with PUWER (Provision and Use of Work Equipment Regulations)
- Controlled increase of downstream pressure onstart up
- High forward flow capacity
- High flow dump facility

Technical features

Medium:
Compressed air only
Operating pressure:
17 bar (250 psi) pilot actuated
10 bar (145 psi) solenoid actuated
Minimum operating pressure:
3 bar (44 psi)
Snap pressure:
Full flow when downstream pressure reaches 50 – 80% of inlet pressure
Port size:
G1/4, G3/8, 1/4” or 3/8” PTF
Air pilot port:
M5 with ISO G main ports
10-32 UNF with PTF main ports
Exhaust port:
G1/4 with ISO G main ports

Charge time:
For 2 litre downstream volume and 6,3 bar (90 psi) inlet pressure
0,8 sec. minimum
99 sec. maximum
Flow:
21 dm^3/s at port size: G1/4
Operating pressure: 6,3 bar (91 psi)
Δp: 0,5 bar (7 psi)
P1 to P2 = Cv 1,59
P2 to P3 = Cv 1,72

Ambient/Media temperature:
Solenoid actuated:
-20° ... +50°C (-4° ... +122°F)
Pilot actuated:
-20° ... +65°C (-4° ... +149°F)
Air supply must be dry enough to avoid ice formation at temperatures below +2°C (+35°F).

Materials:
Body: Zinc alloy
Elastomers: Synthetic materials
Internal components: Brass/steel

.

Electrical details for solenoid operators

Voltage tolerance	± 10%
Rating	100% continuous duty
Inlet orifice	1,0 mm
Electrical connection	Industrial Standard, 22 mm
Solenoid coil mounting	Four positions x 90°
Protection class	IP 65 (with sealed plug)

Technical data - standard models

Symbol	Port size	Size	Actuation/ return	Voltage	Pilot port	Weight (kg)	Typ
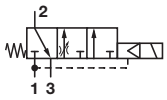	G1/4	Basic	Solenoid/spring	24 V d.c.	-	0,91	P72F-2GC-PFN *1)
	G3/8		Solenoid/spring	24 V d.c.	-	0,90	P72F-3GC-PFN*1)
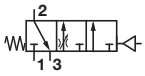	G1/4	Basic	Air/spring	–	M5	0,88	P72F-2GA-NNN
	G3/8		Air/spring	–	M5	0,87	P72F-2GA-NNN

*1) To select other solenoid type and coil voltage refer to option selector on page 2

Voltage codes and spare coils

22 mm coil for connector interface acc. to industrial standard

	Voltage	Power Inrush/Hold	Model	Code
	12 V d.c.	2 W	QM/48/12J/21	12J
	24 V d.c	2 W	QM/48/13J/21	13J
	110/120 V 50/60 Hz	4/2,5 VA	QM/48/18J/21	18J
	220/240 V 50/60 Hz	6/5,0 VA	QM/48/19J/21	19J

Connector plugs

Industrial standard
22 mm 2-pole + PE

0657868

Our policy is one of continued research and development. We therefore reserve the right to amend, without notice, the specifications given in this document. (1996 - 9063d) © 2015 IMI International s.r.o.

Option selector

P72F-★★★-★★★

Port size	Substitute
1/4"	2
3/8"	3

Thread size	Substitute
ISO G (standard)	G
PTF	A

Operator	Substitute
Air pilot *1)	A
22 mm miniature solenoid	C
CNOMO	L

*1)To order air pilot models also substitute 'NNN' at digits 8, 9 and 10 e.g. P72F-2GA-NNN.

Connector plugs	Substitute
With	A
Without	N

Coil voltage	Substitute
24 V d.c.	F
12 V d.c.	E
220/240 V a.c.	B
110/120 V a.c	A
No coil	Z
No solenoid	N

Solenoid operator	Substitute
With	P
No solenoid	N

Flow characteristics

Port size: G1/4

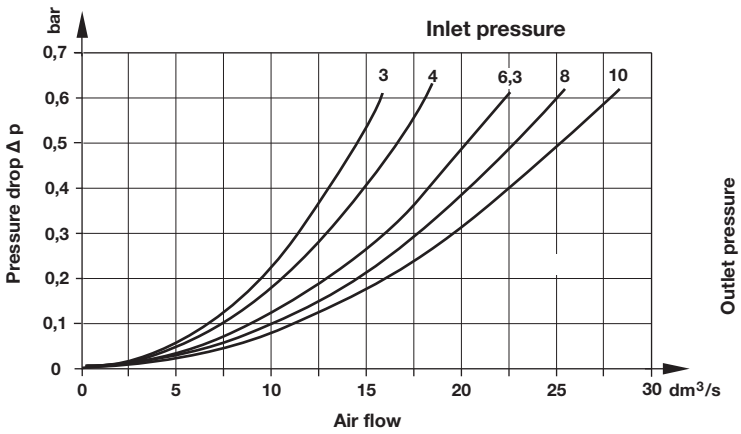

Charge time

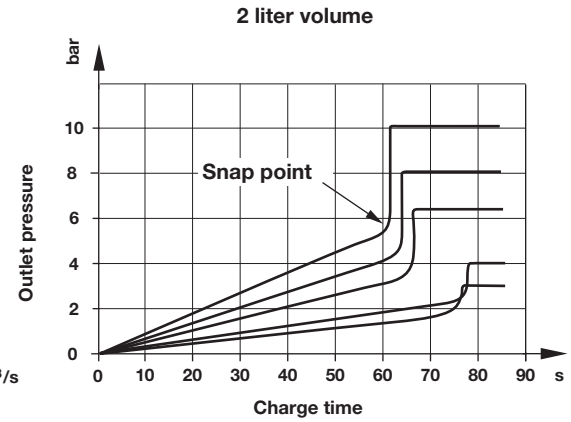

Accessories

Wall mounting bracket	Quikclamp®	Quikclamp with wall bracket®	Quikmount pipe adaptor *1)	Porting block with three alternative G1/4 ports	2/2 Shut-off valves (for full technical specification see datasheet 8.160.600)	3/2 Shut-off valves (for full technical specification see datasheet 8.160.600)
Page 3	Page 3	Page 3	Page 3	Page 3	Page 3	Page 3
4224-50	4214-51	4214-52	G1/4: 4215-08	G1/4: 4216-52	G1/4: T72B-2GA-P1N	G1/4: T72T-2GA-P1N
			G3/8: 4215-09	1/4 PTF: 4216-50	G3/8: T72B-3GA-P1N	G3/8: T72T-3GA-P1N
			1/4 PTF: 4215-02		1/4 PTF: T72B-2AA-P1N	1/4 PTF: T72T-2AA-P1N
			3/8 PTF: 4215-03		3/8 PTF: T72B-3AA-P1N	3/8 PTF: T72T-3AA-P1N

Pressure switch

Porting block for pressure switch	Pressure switch (0,5 ... 8 bar)
0523109000000000	0881300000000000

Padlock

Padlock (brass) with two keys *1)
0613633000000000

*1) for shut-off valves

Silencer

Page 3

R1/4: MB002B
1/4 PTF: MB002A

Our policy is one of continued research and development. We therefore reserve the right to amend, without notice, the specifications given in this document. (1996 - 9063d) © 2015 IMI International s.r.o.

Drawings

Dimensions in mm
Projection/First angle

Solenoid actuated

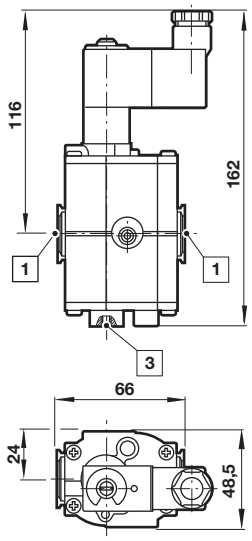

Air pilot actuated

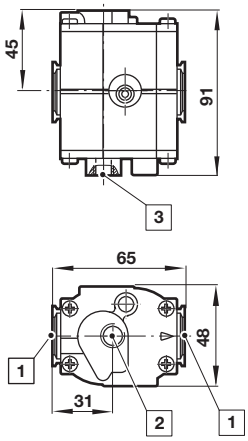

1 Main ports 1/4" or 3/8"
2 Pilot port
3 Exhaust port

Accessories Quikclamp®

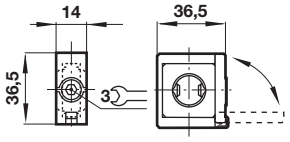

Quikclamp® with wall bracket

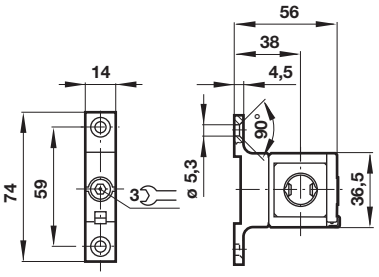

Porting block

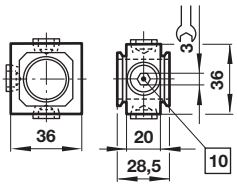

10 Ports (G1/4 or 1/4 NPT) plugged

Pipe adapter

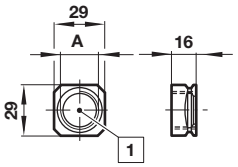

1 Main ports 1/4" or 3/8" ISO G/PTF

Wall mounting bracket

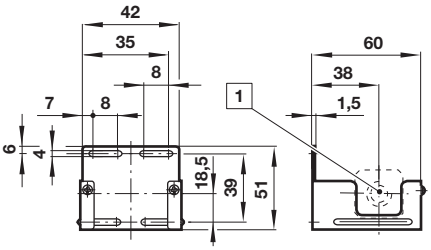

1 Main ports

Shut-off valves

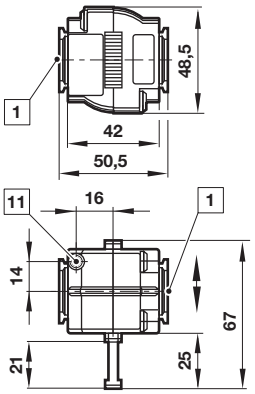

1 Main ports 1/4" or 3/8" ISO G/PTF
11 Exhaust port M5 at 3/2 valve only

Porting block for pressure switch

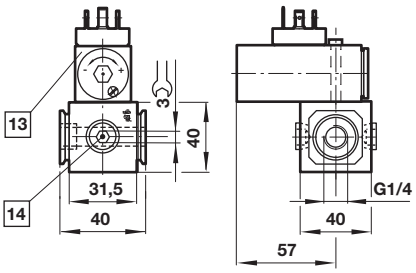

13 Pressure switch is not in scope of delivery
14 Alternative G1/4 ports plugged

Silencer

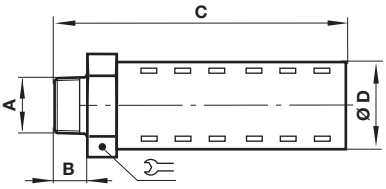

A	B	C	D		Model
R1/4	17	92	32	32	MB002B
1/4 NPT	17	92	32	32	MB002A

Warning

These products are intended for use in industrial compressed air systems only. Do not use these products where pressures and temperatures can exceed those listed under **»Technical features/data«**.
Before using these products with fluids other than those specified, for non-industrial applications, life-support systems or other applications not within published specifications, consult IMI Precision Engineering, Norgren GmbH.
Through misuse, age, or malfunction, components used in fluid power systems can fail in various modes.

The system designer is warned to consider the failure modes of all component parts used in fluid power systems and to provide adequate safeguards to prevent personal injury or damage to equipment in the event of such failure.
System designers must provide a warning to end users in the system instructional manual if protection against a failure mode cannot be adequately provided.
System designers and end users are cautioned to review specific warnings found in instruction sheets packed and shipped with these products.

Our policy is one of continued research and development. We therefore reserve the right to amend, without notice, the specifications given in this document. (1996 - 9063d) © 2015 IMI International s.r.o.

- **Port size: 1/4” or 3/8” (ISO G/PTF)**
- **Excelon design allows in-line installation or modular installation with other Excelon products**
- **T72B 2/2 shut-off valves no exhaust**
- **T72T 3/2 shut-off valves with M5 tapped exhaust**
- **T72E 3/2 USA OSHA lockout valves**
- **Valves can be locked in closed position only**
- **Threaded ports on inlet and outlet**

Technical features

Medium:
Compressed air only
Maximum operating pressure:
17 bar (250 psi)
Port size:
G1/4, G3/8, 1/4 PTF, 3/8 PTF

Exhaust port:
M5 (T72T only)
CV factor:
4,0 from IN to OUT ports:
0,2 from OUT to Exhaust ports on 3/2 valves

Ambient/Media temperature:
-34° ... +65°C (-30° ... +149°F)
Air supply must be dry enough to avoid ice formation at temperatures below +2°C (+35°F).

Materials:
Body: zinc
Slide: Acetal
Elastomers: NBR

Technical data - standard models

Symbol	Port size	Function	Size	Weight (kg)	Model
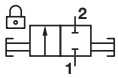	G1/4	2/2	Basic	0,36	T72B-2GA-P1N
	G3/8	2/2	—	0,36	T72B-3GA-P1N
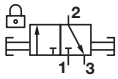	G1/4	3/2	Basic	0,39	T72T-2GA-P1N
	G3/8	3/2	—	0,39	T72T-3GA-P1N

Option selector

T72★-★★A-P1N

Version	Substitute
2/2; black actuator	B
3/2; yellow actuator (OSHA)	E
3/2; red actuator	T
Port size	**Substitute**
1/4”	2
3/8”	3

Thread form	Substitute
PTF	A
ISO G parallel	G

Our policy is one of continued research and development. We therefore reserve the right to amend, without notice, the specifications given in this document. (1998 - 8036d) © 2015 Norgren Inc.

Accessories

Quikclamp®	Quikclamp with wall bracket®	Quikmount pipe adaptor *1)	Porting block with three alternative 1/4” ports	Silencer
4214-51	4214-52	G1/4: 4215-08	G1/4: 4216-52	M5: T40M0500
		G3/8: 4215-09	1/4 PTF: 4216-50	
		1/4 PTF: 4215-02		
		3/8 PTF: 4215-03		

*1) Please use a Quikmount pipe adaptor if the Quikclamp be mounted at inlet or outlet side.

Pressure switch

Porting block for pressure switch	Pressure switch (0,5 ... 8 bar)
0523109000000000	0881300000000000

Padlock

Padlock (brass) with two keys *1)
0613633000000000

*1) for shut-off valves

Drawing

Dimensions in mm
Projection/First angle

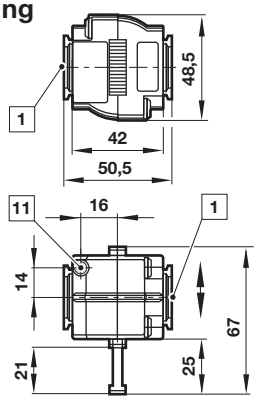

1 Main ports 1/4” or 3/8” ISO G/PTF
11 Exhaust port M5 at T72T only

Accessories

Quikclamp®

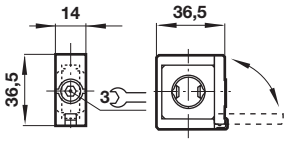

Quikclamp® with wall bracket

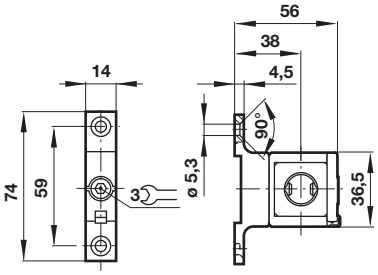

Porting block

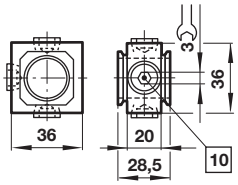

10 Ports (G1/4 or 1/4 NPT) plugged

Pipe adapter

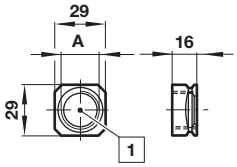

1 Main ports 1/4” or 3/8” ISO G/PTF

Porting block for pressure switch

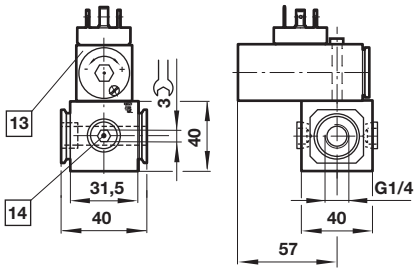

13 Pressure switch is not in scope of delivery
14 Alternative G1/4 ports plugged

Silencer

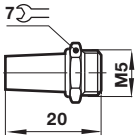

Warning

These products are intended for use in industrial compressed air systems only. Do not use these products where pressures and temperatures can exceed those listed under **»Technical features/data«**.
Before using these products with fluids other than those specified, for non-industrial applications, life-support systems or other applications not within published specifications, consult IMI Precision Engineering, Norgren Inc.
Through misuse, age, or malfunction, components used in fluid power systems can fail in various modes.

The system designer is warned to consider the failure modes of all component parts used in fluid power systems and to provide adequate safeguards to prevent personal injury or damage to equipment in the event of such failure.
System designers must provide a warning to end users in the system instructional manual if protection against a failure mode cannot be adequately provided.
System designers and end users are cautioned to review specific warnings found in instruction sheets packed and shipped with these products.

Our policy is one of continued research and development. We therefore reserve the right to amend, without notice, the specifications given in this document. (1998 - 8036d) © 2015 Norgren Inc.

T82T - 3/2 shut-off valve Excelon® Plus Modular System

- **Port size: 1/4" ... 3/8" (ISO G/PTF)**
- **Excelon® Plus design allows in-line installation or modular installation with other Excelon® Plus products**
- **3/2 way function**
- **Threaded exhaust port**
- **Lockable in closed position with padlock**

Technical features

Medium:
Compressed air only
Maximum supply pressure:
17 bar (246 psi)
Port size:
G1/4, G3/8, 1/4 PTF, 3/8 PTF

Flow:
45 dm3/s at port size 1/4",
41 dm3/s at port size 3/8",
inlet pressure 10 bar (145 psi) ,
6.3bar (91psi) set pressure and a
Δp: 0.5 bar (7.25 psi) droop from set.
Exhaust flow: 1.54 dm^3/s.

Ambient/Media temperature:
-20 ... +65°C (-4 ... +149°F)
Air supply must be dry enough to avoid ice formation at temperatures below +2°C (+35°F).
Atex:
Shut-off valves T82 are in conformity with Atex 2014/34/EU
II 2 GD
Ex h IIC T6 Gb
EX h IIIC T85°C Db

Materials:
Body: Die cast aluminium
Body covers: ABS
Elastomers: NBR
Valve: Brass

Technical data T82T—standard models

Symbol	Port Size	Function	Exhaust port	Weight (kg)	Model
	G1/4	3/2	G1/4	0,20	T82T-2GA-B1N
	G3/8	3/2	G1/4	0,20	T82T-3GA-B1N

Option selector

T82T-★★A-B1N

Function	Substitute
3/2	**T**

Thread form	Substitute
PTF	**A**
ISO G (standard)	**G**

Port size	Substitute
1/4"	**2**
3/8"	**3**

Our policy is one of continued research and development. We therefore reserve the right to amend, without notice, the specifications given in this document. (2017 - 9217b) © 2020 Norgren Ltd

Flow characteristics

Port size: 1/4"

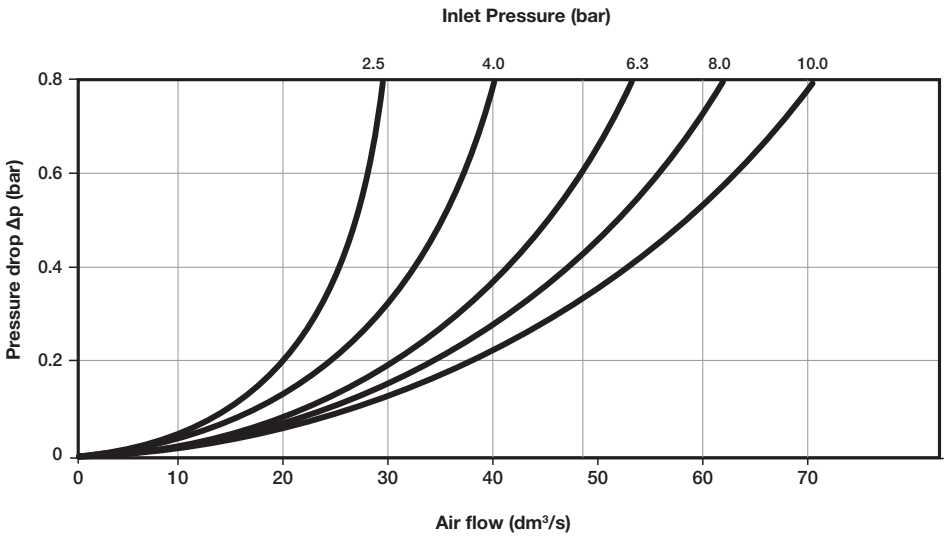

Port size: 3/8"

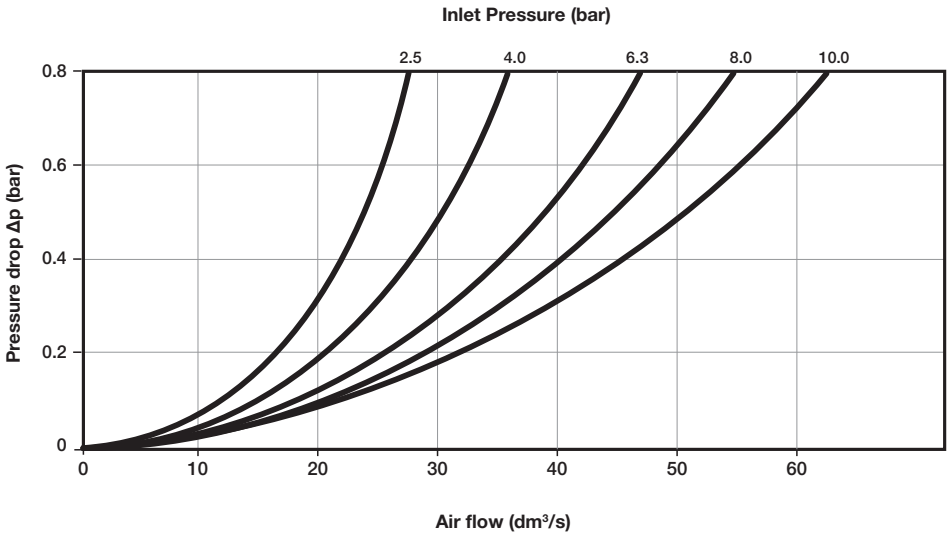

Our policy is one of continued research and development. We therefore reserve the right to amend, without notice, the specifications given in this document. (2017 - 9217b) © 2020 Norgren Ltd

Accessories

Wall mounting bracket

Page 4

820024-50KIT

Quikclamp®

Page 4

820014-51KIT

Quikclamp® with bracket assembled

Page 4

820014-52KIT

Pressure sensing block 1/4 PTF

Page 5

820016-50KIT

Pressure sensing block G1/4

Page 5

820016-51KIT

Full flow porting block 3/8" PTF

Page 5

820028-50KIT

Full flow porting block G3/8

Page 5

820028-53KIT

Pressure switch interface block (18D pressure switch)

Page 5

0523109000000000

Pneumatic pressure switch 18D (0,5 ... 8 bar) *1)

Page 5

0881300

Digital pressure switch 51D (-1 ... 10 bar) *2)

Page 5

0860810

*1) Flanged version. For other pressure ranges, please see data sheet 5.11.001
*2) For other pressure ranges, please see data sheet 5.11.385

Port Adaptors 1/4 PTF

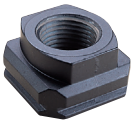

Page 5

820015-02KIT

Port Adaptors 3/8 PTF

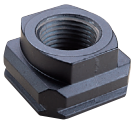

Page 5

820015-03KIT

Port Adaptors G1/4

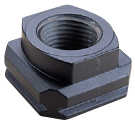

Page 5

820015-08KIT

Port Adaptors G3/8

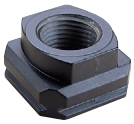

Page 5

820015-09KIT

Padlock

Padlock

840055-01KIT

Lockout device

840055-02KIT

Silencer

Porous plastic silencer *3) G1/4

M/S2

Porous plastic silencer *3) G1/4

0014600000000000

Sinter bronce silencer *3) G1/4

T40C2800

Porous plastic silencer *3) 1/4 PTF

MS002A

*3) Max. pressure of silencers listed in this data sheet : 10 bar. For pressure higher than 10 bar please contact Norgren

Our policy is one of continued research and development. We therefore reserve the right to amend, without notice, the specifications given in this document. (2017 - 9217b) © 2020 Norgren Ltd

Dimensions

Dimensions in mm
Projection/First angle

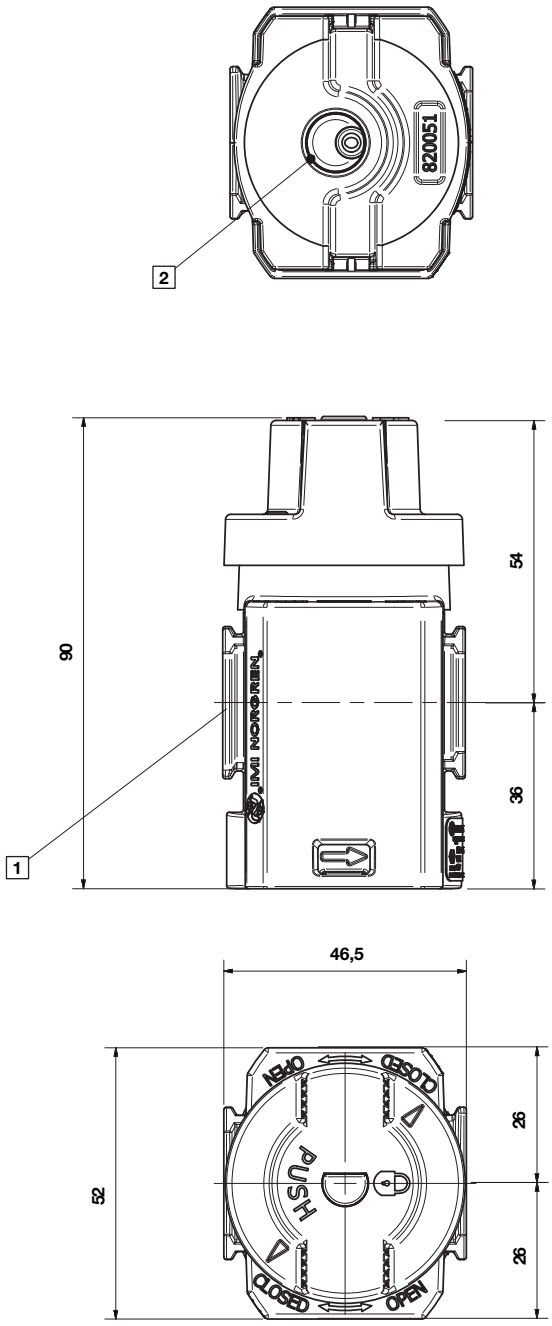

1 Main ports 1/4"or 3/8" ISO G/PTF
2 Exhaust Port Rc1/4 or 1/4 PTF

Our policy is one of continued research and development. We therefore reserve the right to amend, without notice, the specifications given in this document. (2017 - 9217b) © 2020 Norgren Ltd

Accessories

Dimensions in mm
Projection/First angle

Quikclamp® with wall bracket

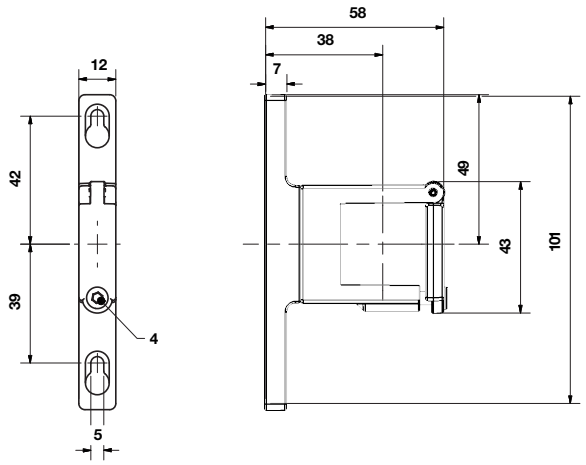

Quikclamp®

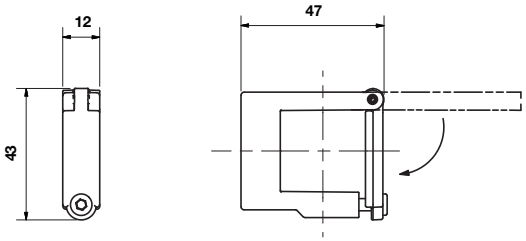

Wall Mounting bracket

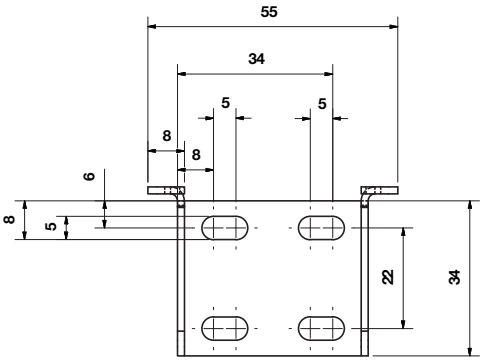

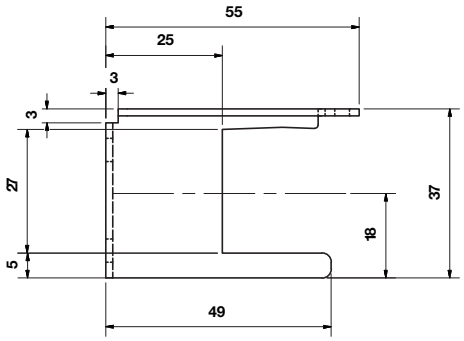

Pressure sensing block

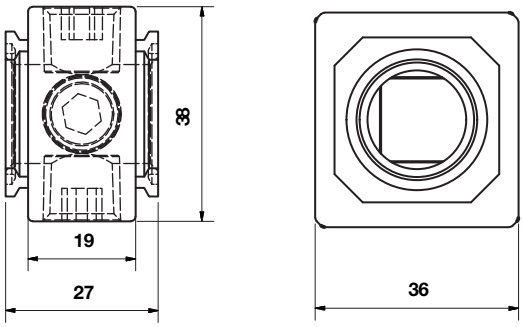

Full flow portiang block

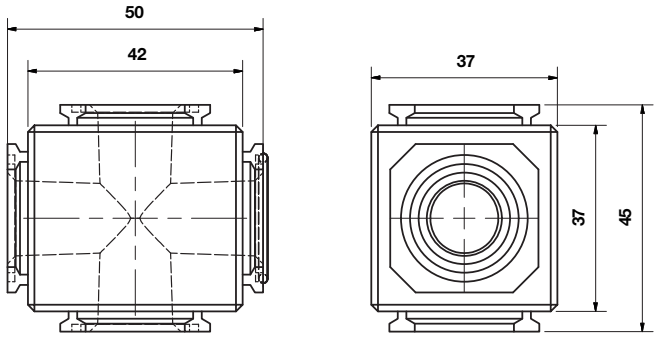

Our policy is one of continued research and development. We therefore reserve the right to amend, without notice, the specifications given in this document. (2017 - 9217b) © 2020 Norgren Ltd

Porting block

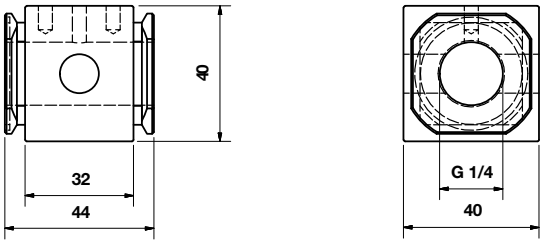

18D Pressure switch

Dimensions in mm
Projection/First angle

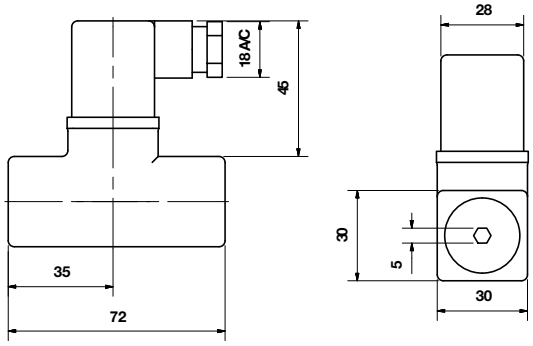

18D Porting block and 18D assembled

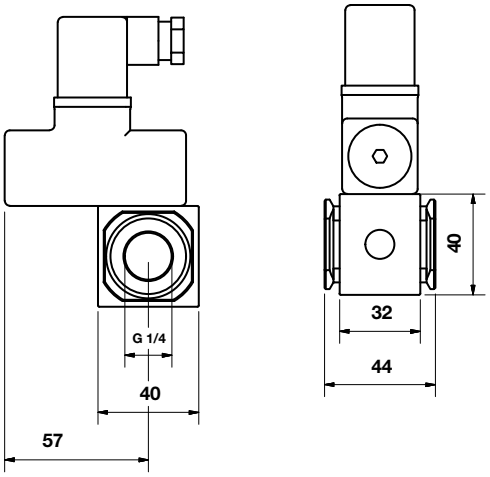

Pipe adaptor

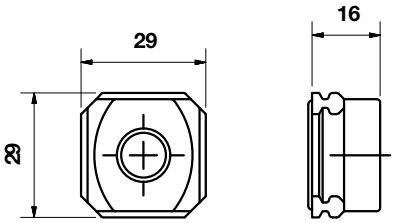

Our policy is one of continued research and development. We therefore reserve the right to amend, without notice, the specifications given in this document. (2017 - 9217b) © 2020 Norgren Ltd

51D Pressure switch - digital

Dimensions in mm
Projection/First angle

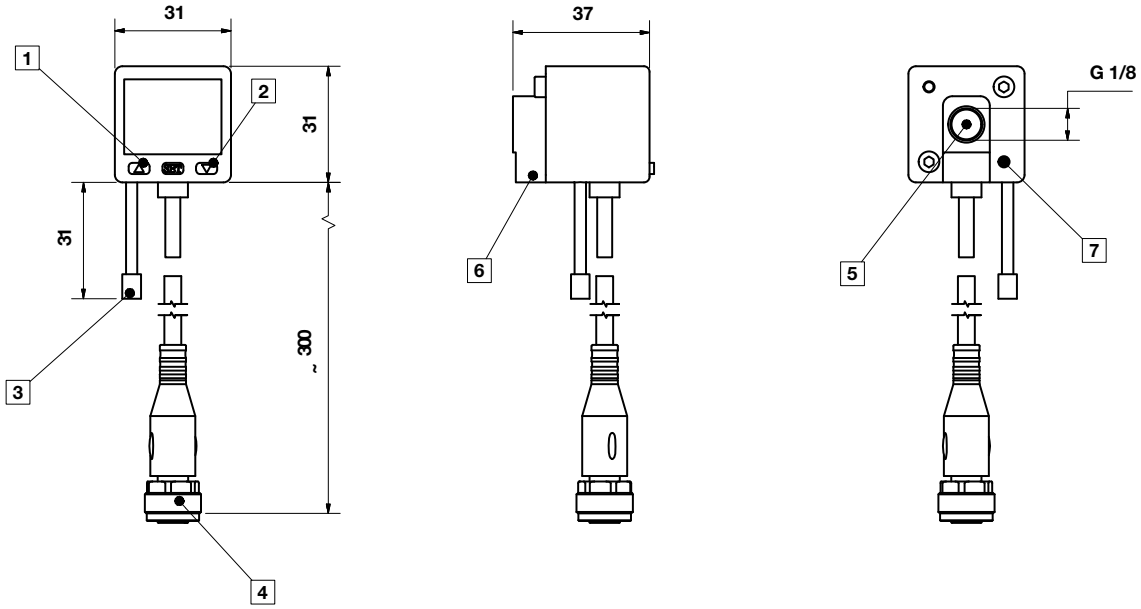

1 Switch OUT 1, green LED
2 Switch OUT 2, red LED
3 Dustproof protector
4 Connector M12 x 1
5 Inlet port
6 Alternative inlet port G1/8 plugged
7 Thread for mounting screw

Warning

These products are intended for use in industrial compressed air systems only. Do not use these products where pressures and temperatures can exceed those listed under »**Technical features/ data**«.
Before using these products with fluids other than those specified, for non-industrial applications, life-support systems or other applications not within published specifications, consult Norgren Ltd.

Through misuse, age, or malfunction, components used in fluid power systems can fail in various modes.

The system designer is warned to consider the failure modes of all component parts used in fluid power systems and to provide adequate safeguards to prevent personal injury or damage to equipment in the event of such failure.
System designers must provide a warning to end users in the system instructional manual if protection against a failure mode cannot be adequately provided.
System designers and end users are cautioned to review specific warnings found in instruction sheets packed and shipped with these products.

Our policy is one of continued research and development. We therefore reserve the right to amend, without notice, the specifications given in this document. (2017 - 9217b) © 2020 Norgren Ltd

P82F 3/2 Soft Start/Dump Valve Excelon® Plus Modular System

- Port size: 1/4" ... 3/8" (ISO G/PTF)
- Excelon® Plus design allows in-line installation or modular installation with other Excelon® Plus products
- High forward flow capacity
- Fast Exhausting
- Variable Snap Adjustment
- Solenoid and air pilot options
- For use as components in safety-related systems according to DIN EN ISO13849 up to a Performance Level (PL)c Cat. 1
  Safety function: Safe Venting.

Technical features

Medium:
Compressed air only
Maximum supply pressure:
10 bar (145 psi)
Minimum operating pressure:
3 bar (43 psi)
Port size:
G1/4, G3/8,
1/4 PTF, 3/8 PTF

Flow:
21 dm³/s at port size 1/4"
Full flow P1 to P2 at 6,3 bar (91 psi) inlet, with 0,5 bar (7 psi) pressure drop
P2 to P3 at 18 dm³/s

Ambient/Media temperature:
-20 ... +65°C (-4 ... +149°F)
Air supply must be dry enough to avoid ice formation at temperatures below +2°C (+35°F).

Materials:
Body: Aluminium
End Caps: Aluminum
Body covers: ABS
Elastomers: NBR
Valve: Brass
Air Pilot: Aluminium

Technical data P82F

Symbol	Port Size	Actuating/return	Voltage	Exhaust Port	Weight (kg)	Model
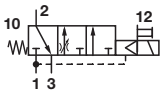	G1/4	Solenoid/spring	24 V d.c.	G1/4	0,45	P82F-2GT-PFN
	G3/8	Solenoid/spring	24 V d.c.	G1/4	0,45	P82F-3GT-PFN
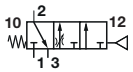	G1/4	Air/spring	N/A	G1/4	0,45	P82F-2GA-NNN
	G3/8	Air/spring	N/A	G1/4	0,45	P82F-3GA-NNN

Electrical details for solenoid operators

Voltage tolerance:	-10%/+15%
Rating:	100% continuous duty
Inlet orifice:	0,8mm
Electrical connection:	15mm DIN EN 175301-803 (DIN 43650) Form C
Manual override:	Shrouded push button, spring return
Protection class:	IP65
Materials:	PP5 (body), NBR (seals)

Our policy is one of continued research and development. We therefore reserve the right to amend, without notice, the specifications given in this document. (2020-9330a) © 2015 IMI International s.r.o.

Option selector

P82F-★★★ -★★N

Function	Substitute
3/2 Soft Start	F

Port Size	Substitute
1/4"	2
3/8"	3

Thread Form	Substitute
PTF	A
ISO G	G

Voltage	Substitute
24 V d.c.	F
110 V a.c.	A
220 V a.c.	B
Non	N

Solendoid Operator	Substitute
Non-Locking push button	P
Non	N

Operator *2)	Substitute
Air pilot*1)	A
Solenoid Operated	T

Flow characteristics

Port 1 to 2
Port size: 1/4"

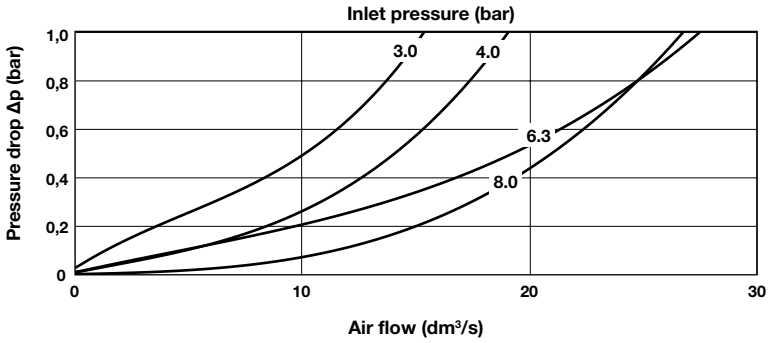

Port 1 to 2
Port size: 3/8"

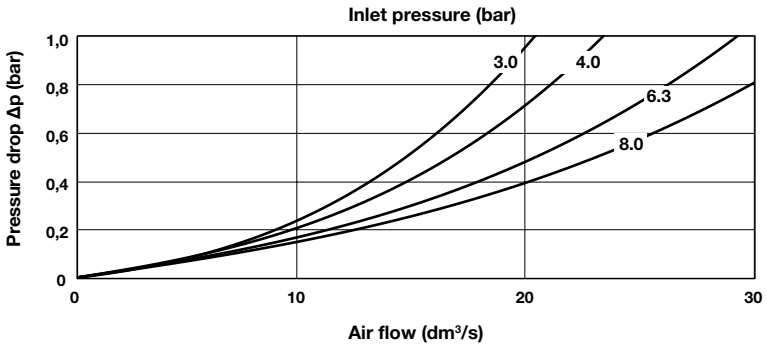

Our policy is one of continued research and development. We therefore reserve the right to amend, without notice, the specifications given in this document. (2020-9330a) © 2015 IMI International s.r.o.

Accessories

Connection cable with plug,LED and M12 Female

Description	Cable length (m)	Model
PUR-Cable; M12/valve type C DIN connector	0,6	NC-DINCA-123MS-A
	1	NC-DINCA-123MS-1
	2	NC-DINCA-123MS-2
	5	NC-DINCA-123MS-5

Plug with with moulded cable and indicator

Voltage	Cable length (m)	Model
12 - 24 V a.c. / d.c	1	V10014-D01
12 - 24 V a.c. / d.c	3	V10014-D03
110 V a.c. / d.c.	1	V10015-D01
110 V a.c. / d.c.	3	V10015-D03
220 V a.c. / d.c	1	V10016-D01
220 V a.c. / d.c	3	V10016-D03

Plug with moulded cable

Description	Cable length (m)	Model
3 pin plug with moulded cable	1	V10013-D01
3 pin plug with moulded cable	3	V10013-D03

Light Emitting Seals ,15mm form C

Description	Model
Light Emitting Seals Circuit A (12 - 24 V d.c.)	V10037-E13
Light Emitting Seals Circuit B (110 - 120 V a.c.)	V10037-E18
Light Emitting Seals Circuit B (220 - 240 V a.c.)	V10037-E19

Plug with cable gland and indicator

Description	Model
Plug with cable gland and indicator 12-24 V a.c. / d.c., c/w LED / VDR	V10012-D13
Plug with cable gland and indicator 110 V a.c. / d.c., c/w LED / VDR	V10012-D18
Plug with cable gland and indicator 220 V a.c. / d.c., c/w LED / VDR	V10012-D19

M12 Adaptor Top - MSUP Valve Plug Form C 8MM

V13981-E01

M12 Adaptor Rear - MSUP Valve Plug Form C 8MM

V13980-E01

Plug with cable gland

V10027-D00

Our policy is one of continued research and development. We therefore reserve the right to amend, without notice, the specifications given in this document. (2020-9330a) © 2015 IMI International s.r.o.

Accessories

Quikclamp®

Page 5

820014-51KIT

Quikclamp® with bracket assembled

Page 5

820014-52KIT

Pressure sensing block 1/4 PTF

Page 5

820016-50KIT

Pressure sensing block G1/4

Page 5

820016-51KIT

Full flow porting block 3/8" PTF

Page 5

820028-50KIT

Full flow porting block G3/8

Page 5

820028-53KIT

Pressure switch interface block (18D pressure switch)

Page 6

0523109000000000

Pneumatic pressure switch 18D (0,5 ... 8 bar) *1)

Page 6

0881300

Digital pressure switch 51D (-1 ... 10 bar) *2)

Page 7

0860810

*1) Flanged version. For other pressure ranges, please see data sheet 5.11.001
*2) For other pressure ranges, please see data sheet 5.11.385

Port Adaptors 1/4 PTF

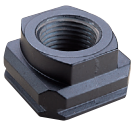

Page 6

820015-02KIT

Port Adaptors 3/8 PTF

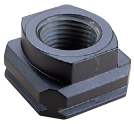

Page 6

820015-03KIT

Port Adaptors G1/4

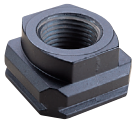

Page 6

820015-08KIT

Port Adaptors G3/8

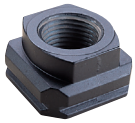

Page 6

820015-09KIT

Silencer

Heavy duty muffler, 1/4" NPT male thread, brass wire element

MB002A

Heavy duty muffler, R1/4 male thread, brass wire element

MB002B

Voltage rating and spare coils

	Voltage	Power	Replacement
	24 V d.c.	1,2 W	840650-50KIT
	110 V a.c.	1,5 VA	840650-51KIT
	220 V a.c.	1,5 VA	840650-52KIT

Our policy is one of continued research and development. We therefore reserve the right to amend, without notice, the specifications given in this document. (2020-9330a) © 2015 IMI International s.r.o.

Dimensions

Dimensions in mm
Projection/First angle

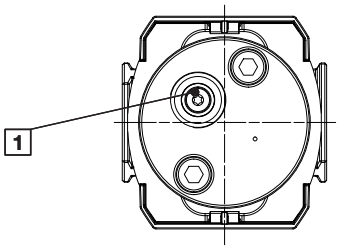

1 1/4" exhaust port (NPT or ISO G)

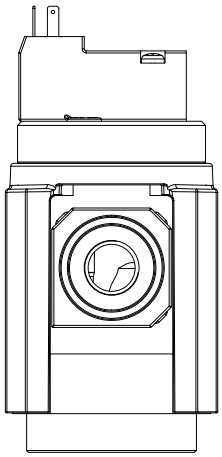

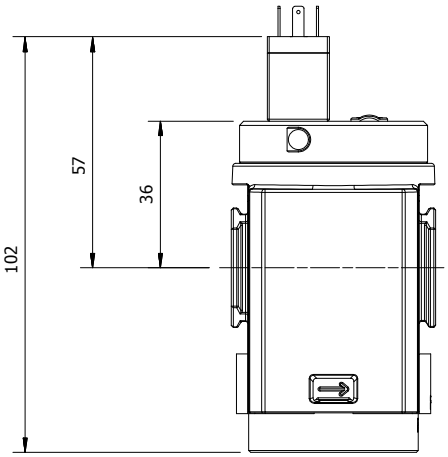

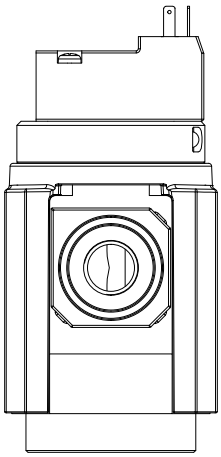

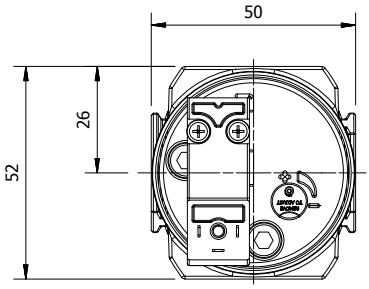

Our policy is one of continued research and development. We therefore reserve the right to amend, without notice, the specifications given in this document. (2020-9330a) © 2015 IMI International s.r.o.

Dimensions

Air Pilot Operator

Dimensions in mm
Projection/First angle

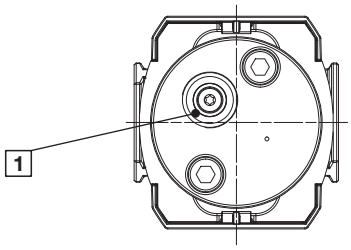

1 1/4" exhaust port (NPT or ISO G)

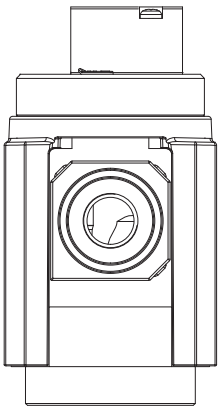

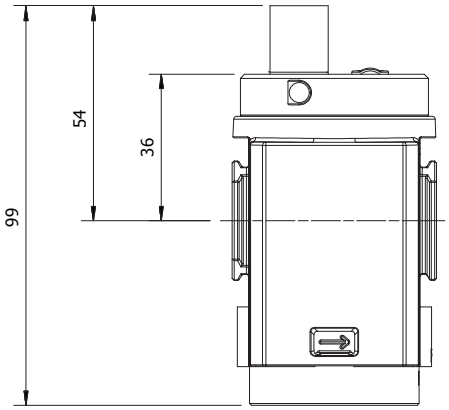

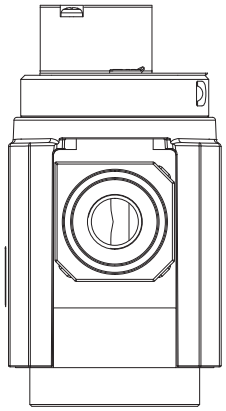

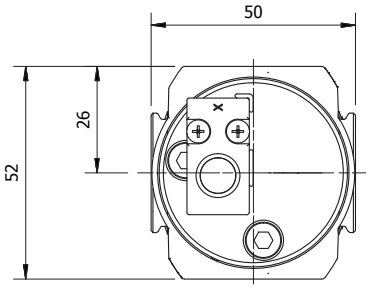

Our policy is one of continued research and development. We therefore reserve the right to amend, without notice, the specifications given in this document. (2020-9330a) © 2015 IMI International s.r.o.

Accessories

Dimensions in mm
Projection/First angle

Quikclamp® with wall bracket

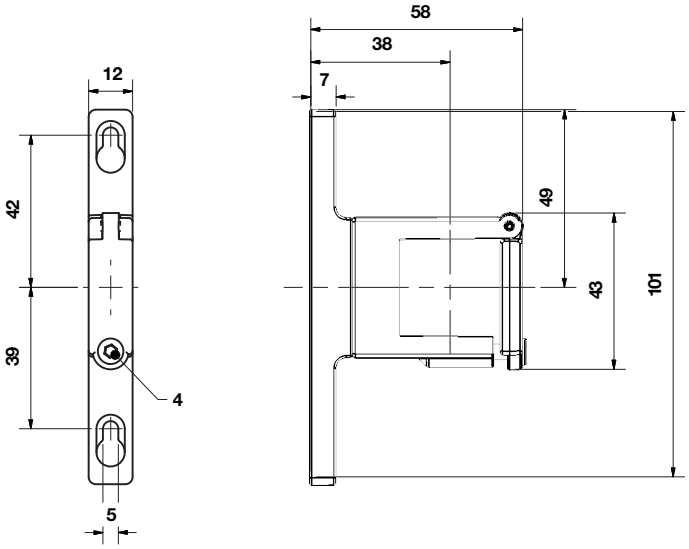

Quikclamp®

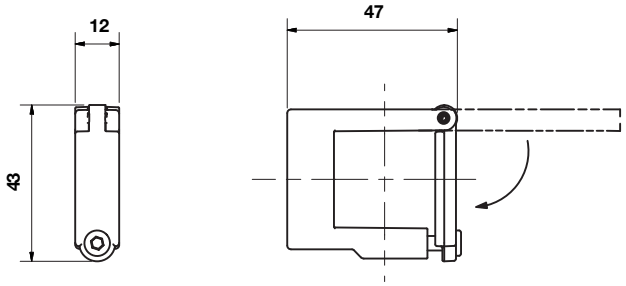

Pressure sensing block

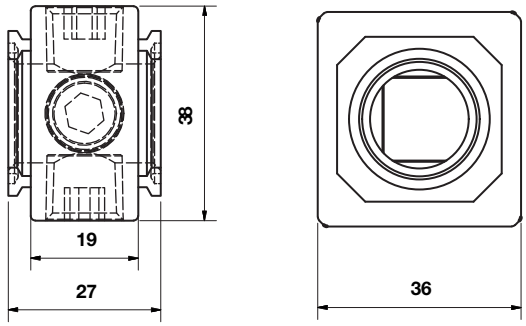

Full flow porting block

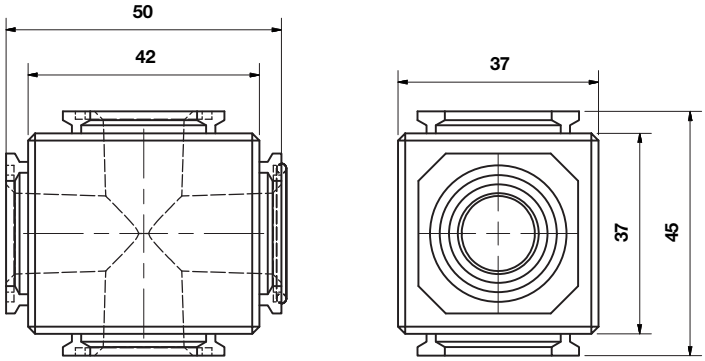

Our policy is one of continued research and development. We therefore reserve the right to amend, without notice, the specifications given in this document. (2020-9330a) © 2015 IMI International s.r.o.

Porting block for 18D pressure switch

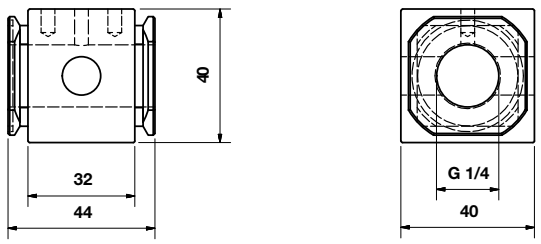

18D Pressure switch

Dimensions in mm
Projection/First angle

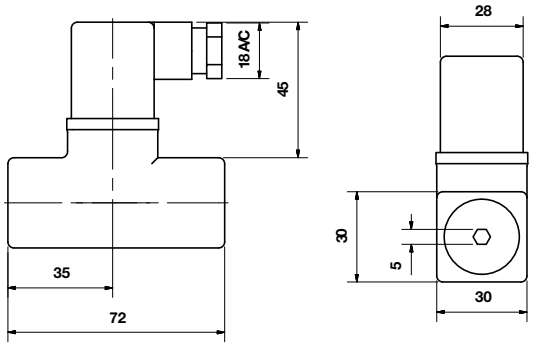

18D Porting block and 18D assembled

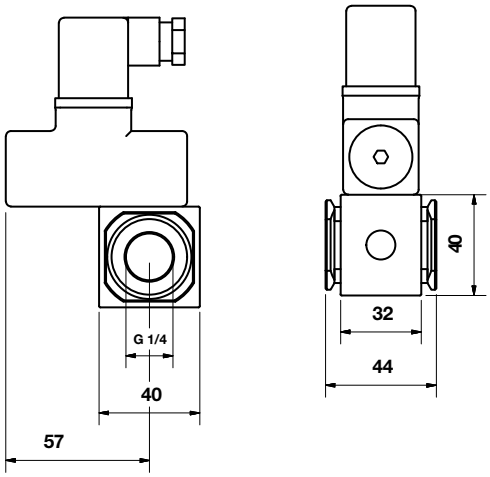

Pipe adaptor

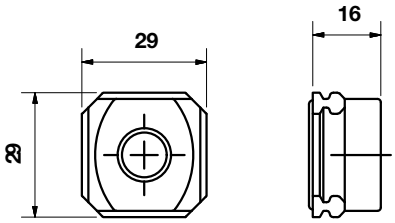

Silencer

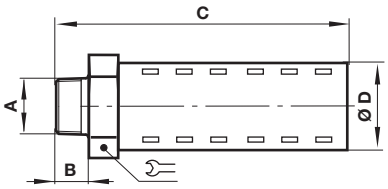

A	B	C	D		Model
R1/4	17	92	32	32	MB002B
1/4 NPT	17	92	32	32	MB002A

Our policy is one of continued research and development. We therefore reserve the right to amend, without notice, the specifications given in this document. (2020-9330a) © 2015 IMI International s.r.o.

51D Pressure switch - digital

Dimensions in mm
Projection/First angle

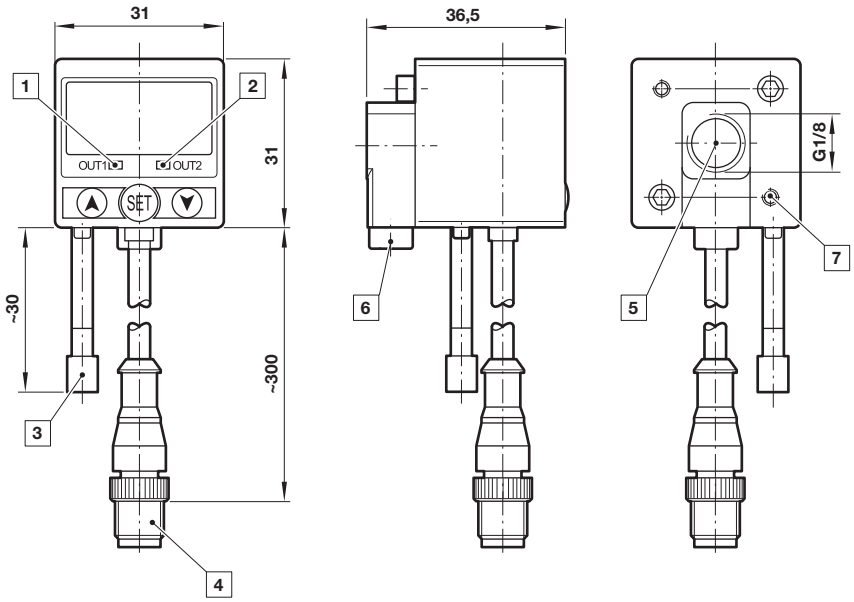

1 Switch OUT 1, green LED
2 Switch OUT 2, red LED
3 Dustproof protector
4 Connector M12 x 1
5 Inlet port
6 Alternative inlet port G1/8 plugged
7 Thread for mounting screw

Warning

These products are intended for use in industrial compressed air systems only. Do not use these products where pressures and temperatures can exceed those listed under »**Technical features/ data**«.
Before using these products with fluids other than those specified, for non-industrial applications, life-support systems or other applications not within published specifications, consult Norgren Ltd.

Through misuse, age, or malfunction, components used in fluid power systems can fail in various modes.

The system designer is warned to consider the failure modes of all component parts used in fluid power systems and to provide adequate safeguards to prevent personal injury or damage to equipment in the event of such failure.
System designers must provide a warning to end users in the system instructional manual if protection against a failure mode cannot be adequately provided.
System designers and end users are cautioned to review specific warnings found in instruction sheets packed and shipped with these products.

Our policy is one of continued research and development. We therefore reserve the right to amend, without notice, the specifications given in this document. (2020-9330a) © 2015 IMI International s.r.o.

P82C 3/2 Wegeventil
Excelon® Plus Modular System

- **Anschluss: 1/4" ... 3/8" (ISO G/PTF)**
- **Excelon® Plus erlaubt direkten Leitungseinbau oder modulare Installation mit anderen Excelon® Plus Produkten**
- **Hohe Durchflussleistung**
- **Schnelle Entlüftung**
- **3/2 Wegeventil, normal geschlossen**
- **Optional elektropneumatisch oder pneumatisch betätigt**
- **Zur Verwendung als Komponente in sicherheitsbezogenen Systemen für Sicherheitsfunktion „Sicheres Entlüften" bis zu einem Performance Level (PL) c Kat. 1 entsprechend DIN EN ISO13849**

Technische Merkmale

Betriebsmedium:
Druckluft
Max. Betriebsdruck:
10 bar (145 psi)
Min. Betriebsdruck:
3 bar (43 psi)
Anschluss:
G1/4, G3/8,
1/4 PTF, 3/8 PTF

Durchfluss:
20 dm³/s bei Anschluss 1/4" Durchfluss von Anschluss 1 nach 2, bei 6,3bar (91psi) Eingangsdruck und einer Druckdifferenz von Δp 0,5 bar (7 psi) Durchfluss von Anschluss 2 nach 3: 20 dm³/s

Umgebungs-/ Mediumstemperatur:
-20 ... +65°C (-4 ... +149°F)
Um das Einfrieren zu vermeiden, muss die Druckluft unter +2°C (+35°F) frei von Feuchtigkeit sein

Material:
Gehäuse: Aluminium
Endkappen: Aluminum
Gehäusekappe:ABS
Dichtungen: NBR
Ventil: Kupfer
Druckluftansteuerung: Aluminium

Technische Daten P82C

Symbol	Anschluss	Betätigung/Rückstellung	Spannung	Entlüftungsanschluss	Gewicht (kg)	Typ
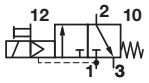	G1/4	Elektropneumatisch/Feder	24 V DC	G1/4	0,43	P82C-2GT-PFN
	G3/8	Elektropneumatisch/Feder	24 V DC	G1/4	0,43	P82C-3GT-PFN
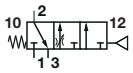	G1/4	Druckluft/Feder	-	G1/4	0,43	P82C-2GA-NNN
	G3/8	Druckluft/Feder	-	G1/4	0,43	P82C-3GA-NNN

Kenngrößen für Elektromagnete

Spannungstoleranz	-10%/+15%
Rating:	100% Dauerbetrieb
Nennweite:	0,8mm
Elektrischer Anschluss:	15mm DIN EN 175301-803 (DIN 43650) Form C
Handhilfsbetätigung:	Nicht rastend
Schutzart:	IP65
Material:	PP5 (Gehäuse), NBR (Dichtungen)

Konstruktionsänderungen vorbehalten.(2020-9329a) © 2015 IMI International s.r.o.

Typenschlüssel

P82C-★★★ -★★N

Funktion	Kennung
3/2 Wegeventil	C
Anschluss	**Kennung**
1/4"	2
3/8"	3
Gewinde	**Kennung**
PTF	A
ISO G	G

Spannung	Kennung
24 V DC	F
110 V AC	A
220 V AC	B
Kein Magnet	N
Handhilfsbetätigung	**Kennung**
Drücken, nicht arretierbar	P
Ohne	N
Betätigung *1)	**Kennung**
Pneumatisch*2)	A
Elektropneumatisch	T

Durchflusscharakteristik

Anschluss 1 nach 2

Anschluss: 1/4"

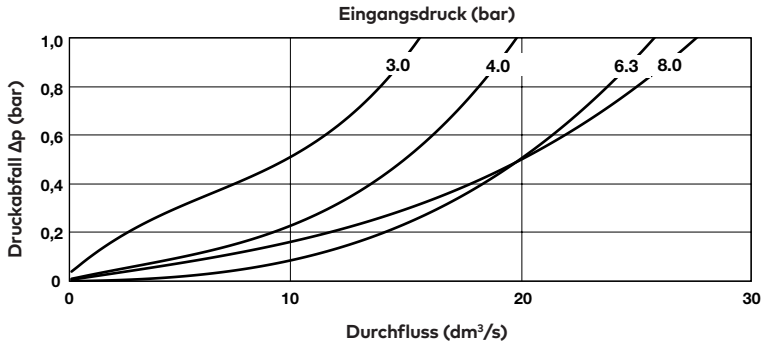

Anschluss 1 nach 2

Anschluss: 3/8"

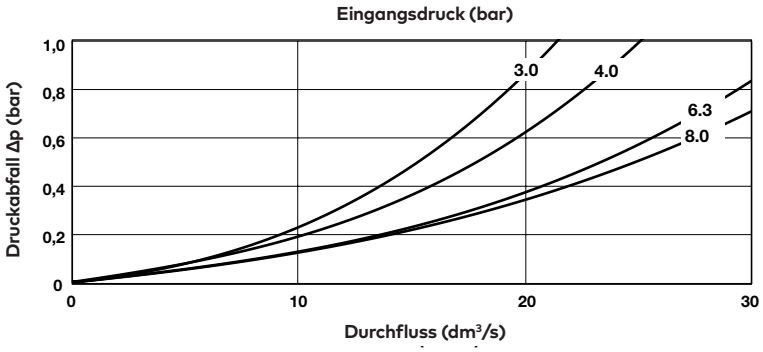

Konstruktionsänderungen vorbehalten.(2020-9329a) © 2015 IMI International s.r.o.

Zubehör

Verbindungskabel mit Stecker Bauform C, LED und Steckverbindung M12

Beschreibung	Kabel-länge (m)	Typ
Steckverbinder M12 gerade - PUR Kabel - Steckverbinder mit LED, Bauform C DIN, abgewinkelt	0,6	NC-DINCA-123MS-A
	1	NC-DINCA-123MS-1
	2	NC-DINCA-123MS-2
	5	NC-DINCA-123MS-5

Ventilstecker Bauform C mit LED und eingegossenem Verbindungskabel

Spannung	Kabel-länge (m)	Typ
12 - 24 V AC / D.C	1	V10014-D01
12 - 24 V AC / D.C	3	V10014-D03
110 V AC / D.C.	1	V10015-D01
110 V AC / D.C.	3	V10015-D03
220 V AC / D.C	1	V10016-D01
220 V AC / D.C	3	V10016-D03

Ventilstecker Bauform C mit eingegossenem Verbindungskabel

Beschreibung	Kabel-länge (m)	Typ
3-poliger Stecker mit Verbindungskabel	1	V10013-D01
3-poliger Stecker mit Verbindungskabel	3	V10013-D03

Leuchtdichtung, 15mm Form C

Beschreibung	Typ
Leuchtdichtung (12 - 24 V DC)	V10037-E13
Leuchtdichtung (110 - 120 V AC)	V10037-E18
Leuchtdichtung (220 - 240 V AC)	V10037-E19

Stecker Bauform C mit LED/VDR

Beschreibung	Typ
Stecker 24 V DC komplett mit LED/VDR	V10012-D13
Stecker 110 V AC komplett mit LED/VDR	V10012-D18
Stecker 220 V AC komplett mit LED/VDR	V10012-D19

M12 Adapter mit LED - Stecker Form C auf M12

V13981-E01

M12 Adapter mit LED - Stecker Form C auf M12

V13980-E01

Stecker Bauform C

V10027-D00

Konstruktionsänderungen vorbehalten.(2020-9329a) © 2015 IMI International s.r.o.

Zubehör

Quikclamp®

Seite 5

820014-51KIT

Quikclamp®mit Befestigung-swinkel

Seite 5

820014-52KIT

Anschlussblock 1/4 PTF

Seite 5

820016-50KIT

Anschlussblock G1/4

Seite 5

820016-51KIT

Verteilerblock 3/8" PTF

Seite 5

820028-50KIT

Verteilerblock G3/8

Seite 5

820028-53KIT

Anschlussflansch mit DS-Interface 18D Druckschalter

Seite 6

0523109000000000

Druckschalter 18D (0,5 ... 8 bar) *1)

Seite 6

0881300

Digitaler Druckschalter 51D (-1 ... 10 bar) *2)

Seite 7

0860810

*1) Mit Flanschanschluss Für weitere Schaltdruckbereiche siehe Datenblatt 5.11.001
*2) Für weitere Schaltdruckbereiche siehe Datenblatt 5.11.385

Gewindeflansch 1/4 PTF

Seite 6

820015-02KIT

Gewindeflansch 3/8 PTF

Seite 6

820015-03KIT

Gewindeflansch G1/4

Seite 6

820015-08KIT

Gewindeflansch G3/8

Seite 6

820015-09KIT

Schalldämpfer

Hochleistungsschalldämpfer 1/4" NPT

MB002A

Hochleistungsschalldämpfer R1/4

MB002B

Nennspannung und Ersatzspulen

	Spannung	Leistung	Ersatzteil
	24 V DC	1,2 W	840650-50KIT
	110 V AC	1,5 VA	840650-51KIT
	220 V AC	1,5 VA	840650-52KIT

Konstruktionsänderungen vorbehalten.(2020-9329a) © 2015 IMI International s.r.o.

Abmessungen

Abmessungen in mm
Projection/First angle

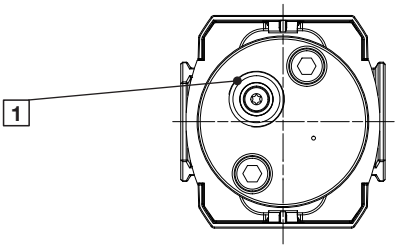

1 1/4" Entlüftungsanschluss (NPT oder ISO G)

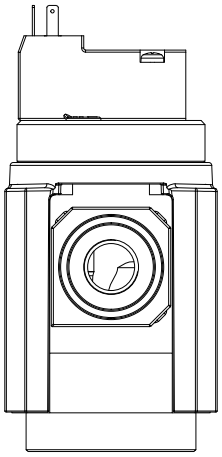

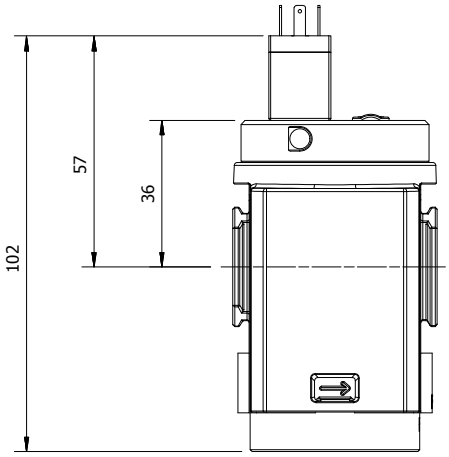

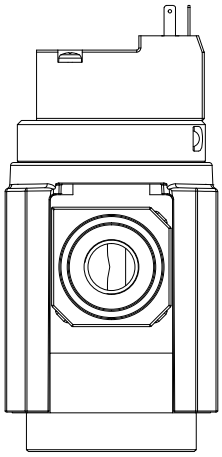

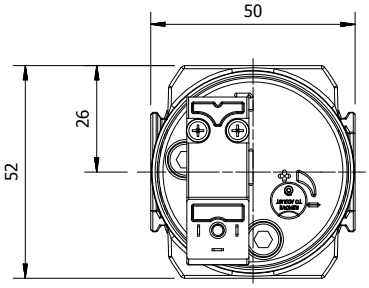

Konstruktionsänderungen vorbehalten.(2020-9329a) © 2015 IMI International s.r.o.

Abmessungen

Pneumatische Betätigung

Abmessungen in mm
Projection/First angle

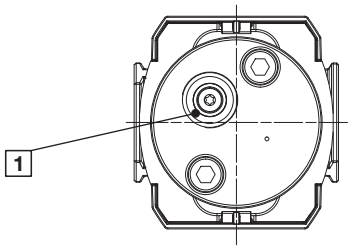

1 1/4" Entlüftungsanschluss (NPT oder ISO G)

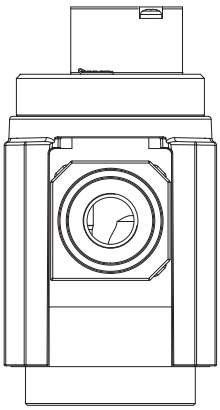

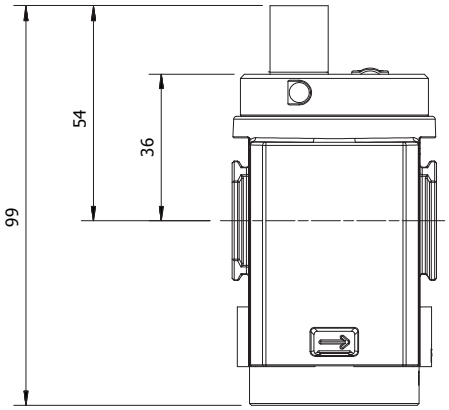

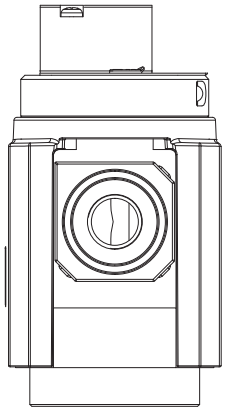

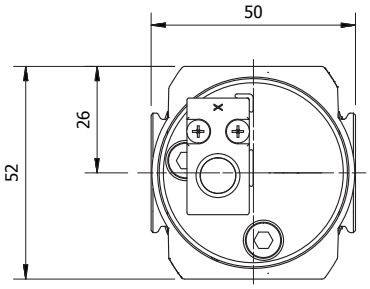

Konstruktionsänderungen vorbehalten.(2020-9329a) © 2015 IMI International s.r.o.

Zubehör

Abmessungen in mm
Projection/First angle

Quikclamp®mit Befestigungswinkel

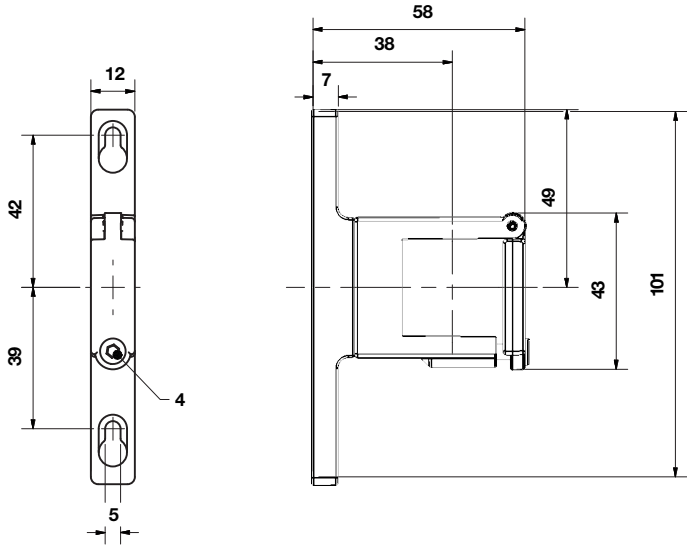

Quikclamp®

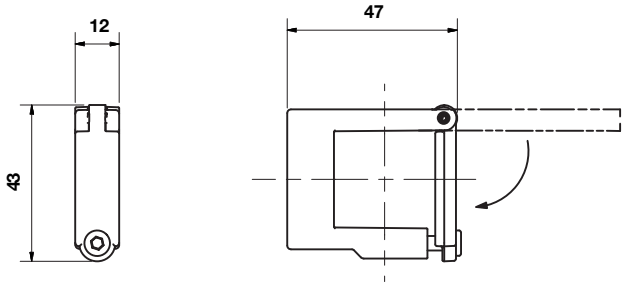

Anschlussblock

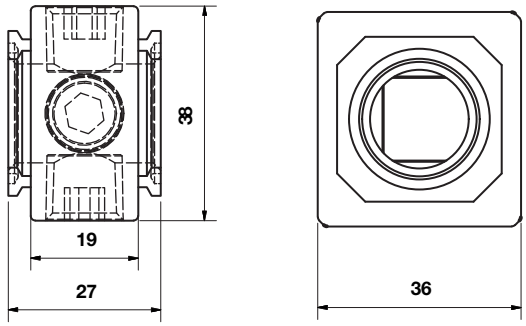

Verteilerblock

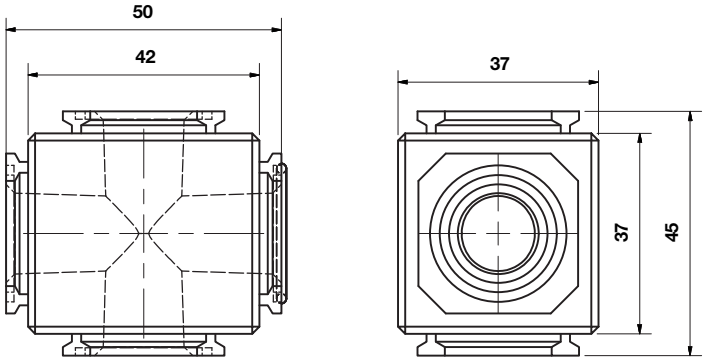

Konstruktionsänderungen vorbehalten.(2020-9329a) © 2015 IMI International s.r.o.

Anschlussblock für 18D Druckschalter

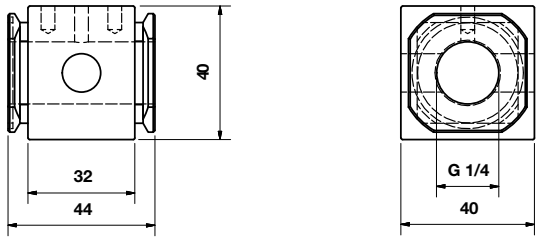

18D Druckschalter

Abmessungen in mm
Projection/First angle

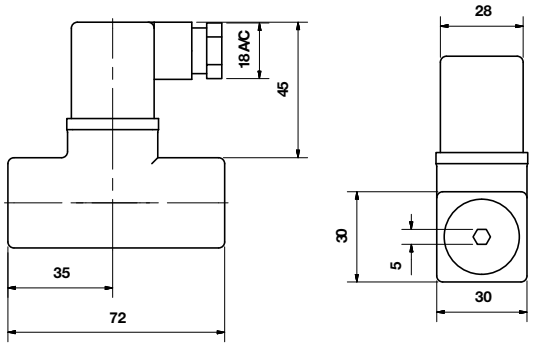

Anschlussflansch mit DS-Interface 18D und montiertem 18D Druckschalter

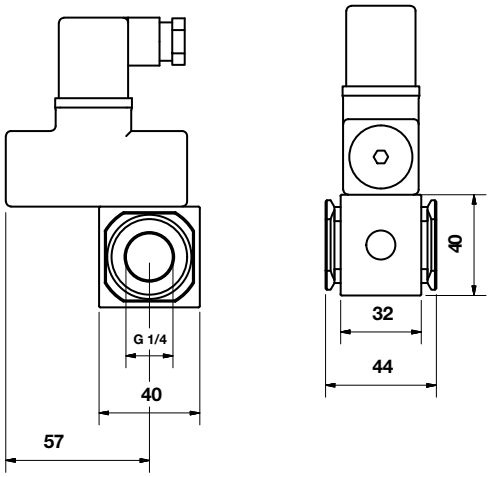

Gewindeflansch

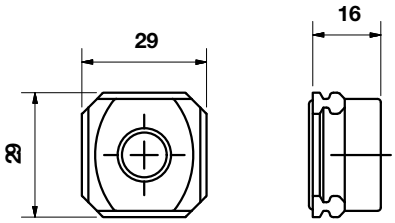

Schalldämpfer

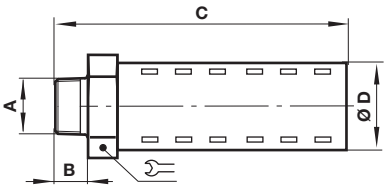

A	B	C	D		Typ
R1/4	17	92	32	32	MB002B
1/4 NPT	17	92	32	32	MB002A

Konstruktionsänderungen vorbehalten.(2020-9329a) © 2015 IMI International s.r.o.

51D Digitaler Druckschalter

Abmessungen in mm
Projection/First angle

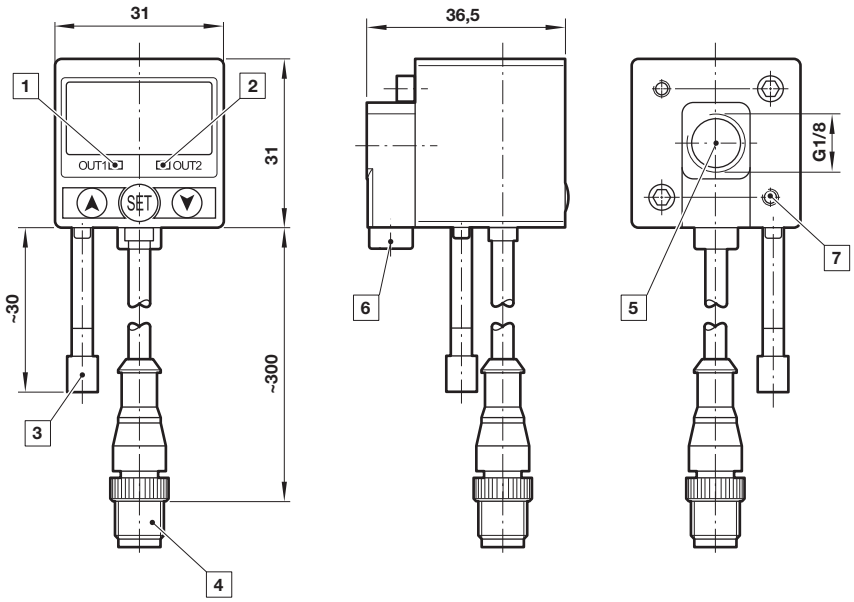

1 Schalter AUS 1, grüne LED
2 Schalter AUS 2, rote LED
3 Staubdichter Schutz
4 Stecker M12 x 1
5 Einlassöffnung
6 Alternative Einlassöffnung G1/8 eingesteckt
7 Gewinde für Befestigungsschraube

Sicherheitshinweise

Diese Produkte sind ausschließlich in Druckluftsystemen zu verwenden. Sie sind dort einzusetzen, wo die unter **»Technische Merkmale/-Daten«** aufgeführten Werte nicht überschritten werden.
Berücksichtigen Sie bitte die entsprechende Katalogseite. Vor dem Einsatz der Produkte bei nicht industriellen Anwendungen, in lebenserhaltenden oder anderen Systemen, die nicht in den veröffentlichten Anleitungsunterlagen enthalten sind, wenden Sie sich bitte direkt an Norgren Ltd.

Durch Missbrauch, Verschleiß oder Störungen können in Fluidsystemen verwendete Komponenten auf verschiedene Arten versagen. Systemauslegern wird dringend empfohlen, die Störungsarten aller in Hydrauliksystemen verwendeten Komponententeile zu berücksichtigen und ausreichende Sicherheitsvorkehrungen zu treffen, um Verletzungen von Personen sowie Beschädigungen der Geräte im Falle einer solchen Störung zu verhindern. Systemausleger sind verpflichtet, Sicherheitshinweise für den Endbenutzer im Betriebshandbuch zu vermerken, wenn der Störungsschutz nicht ausreichend gewährleistet ist.

Konstruktionsänderungen vorbehalten.(2020-9329a) © 2015 IMI International s.r.o.

- Port size: Ø 6 ... 12 mm G1/8 ... G3/8
- Configuration flexibility
- Low weight
- No tools required for assembly

Technical features

Medium:
Compressed air
Maximum operating pressure:
12 bar (174 psi) max.

Ambient/Media temperature:
-20 ... +60°C (-4 ... +140°F)
Air supply must be dry enough to avoid ice formation at temperatures below +2°C (+35°F).

Materials:
Body and valve stem: PBT
Internal parts: Acetal
Elastomers: NBR and TPE

Technical data - standard models

Symbol	Port size	Connector	Flow (Cv factor)	Weight (kg)	Model
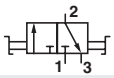	G 1/4	With mounting bracket	2,57	0,16	T92T-2GN-B1N

Option selector

T92T-★★N-B1N

Connector with mounting bracket	Substitute
6 mm Push-in fitting	**6D**
8 mm Push-in fitting	**8D**
10 mm Push-in fitting	**AD**
12 mm Push-in fitting	**BD**
G 1/8	**1G**
G 1/4	**2G**
G 3/8	**3G**

Connector without mounting bracket	Substitute
G1/4	**2V**
Connector	**Substitute**
Without	**NN**

Our policy is one of continued research and development. We therefore reserve the right to amend, without notice, the specifications given in this document. (2008 - 8006d) © 2015 Norgren Inc.

Component parts and accessories

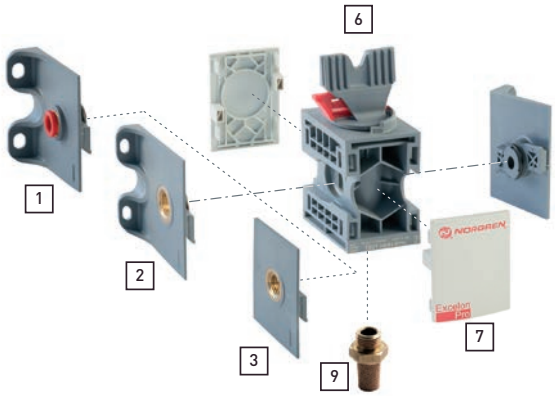

Port size	Push-in fitting connector with mounting bracket 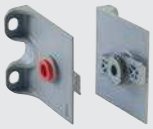 1	Threaded connector with mounting bracket 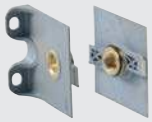 2	Threaded connector without mounting bracket 3
G1/8	-	9212KIT-1G	-
G1/4	-	9212KIT-2G	9211KIT-2V
G3/8	-	9212KIT-3G	-
ø 6 mm	9213KIT-6D	-	-
ø 8 mm	9213KIT-8D	-	-
ø 10 mm	9213KIT-AD	-	-
ø 12 mm	9213KIT-BD	-	-

Quick connector	Locking plate	Silencer
4	7	9
9210-50	9236-88	T40M0500

Warning
Locking plates MUST be in place before pressurizing any Excelon Pro unit.

Our policy is one of continued research and development. We therefore reserve the right to amend, without notice, the specifications given in this document. (2008 - 8006d) © 2015 Norgren Inc.

Drawings

Shut-off valve with wall mounting bracket

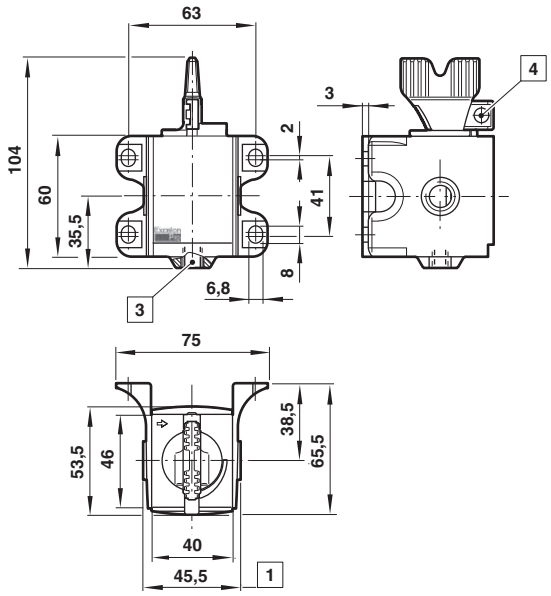

Shut-off valve without mounting bracket

Dimensions in mm
Projection/First angle

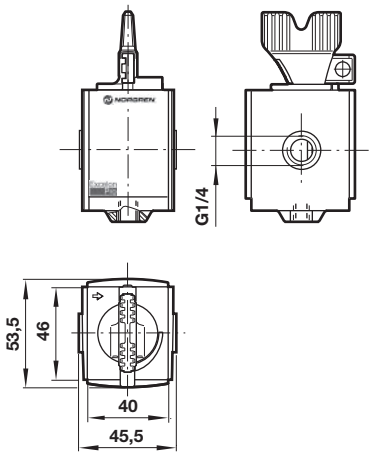

Minimum clearance required to remove bowl

1 Connector Dimensions
1/8" and 1/4" threaded connectors shown. See below for port-to-port dimensions for additional connectors.

PIF Connector	Port-to-port
6 mm, 8 mm	60
10 mm, 12 mm	62
Threaded connector	
G1/8, G1/4	45,5
G3/8	76

Warning

These products are intended for use in industrial compressed air systems only. Do not use these products where pressures and temperatures can exceed those listed under **»Technical features/data«**.
Before using these products with fluids other than those specified, for non-industrial applications, life-support systems or other applications not within published specifications, consult IMI Precision Engineering, Norgren Inc.
Through misuse, age, or malfunction, components used in fluid power systems can fail in various modes.

The system designer is warned to consider the failure modes of all component parts used in fluid power systems and to provide adequate safeguards to prevent personal injury or damage to equipment in the event of such failure.
System designers must provide a warning to end users in the system instructional manual if protection against a failure mode cannot be adequately provided.
System designers and end users are cautioned to review specific warnings found in instruction sheets packed and shipped with these products.

Our policy is one of continued research and development. We therefore reserve the right to amend, without notice, the specifications given in this document. (2008 - 8006d) © 2015 Norgren Inc.

T68C-6GB-B2N

Olympian 68 3/2 G3/4 Shut-off Valve

Overview Technical Details

3 port/2 position
Easy to operate
Lockable in the 'closed' position

Medium:	Compressed Air
Port Size:	G3/4
Actuation:	Manual

Downloads

CAD Installation Guide (PDF)

CAD

We offer CAD for the vast majority of our product range providing you with access to download 2D and 3D CAD models, quickly and easily in a wide range of file formats and versions.

CAD & CONFIGURATION

Technical Details

Medium	Compressed Air
Operating Temperature	-20 ... 80 °C
Port Size	G3/4
Actuation	Manual
Maximum Inlet Pressure	17 bar
Materials - Elastomers	Nitrile rubber
Range	T68C
Series	Olympian Plus
Brand	Norgren

T68C-AGB-B2N

Olympian 68 3/2 G1-1/4 Shut-off Valve

Overview Technical Details

3 port/2 position
Easy to operate
Lockable in the 'closed' position

Medium:	Compressed Air
Port Size:	G1-1/4
Actuation:	Manual

Downloads

CAD Installation Guide (PDF)

CAD

We offer CAD for the vast majority of our product range providing you with access to download 2D and 3D CAD models, quickly and easily in a wide range of file formats and versions.

CAD & CONFIGURATION

Technical Details

Medium	Compressed Air
Operating Temperature	-20 ... 80 °C
Port Size	G1-1/4
Actuation	Manual
Maximum Inlet Pressure	17 bar
Materials - Elastomers	Nitrile rubber
Range	T68C
Series	Olympian Plus
Brand	Norgren

T68C-BGB-B2N

Olympian 68 3/2 G1-1/2 Shut-off Valve

Overview Technical Details

3 port/2 position
Easy to operate
Lockable in the 'closed' position

Medium:	Compressed Air
Port Size:	G1-1/2
Actuation:	Manual

Downloads

CAD Installation Guide (PDF)

CAD

We offer CAD for the vast majority of our product range providing you with access to download 2D and 3D CAD models, quickly and easily in a wide range of file formats and versions.

CAD & CONFIGURATION

Technical Details

Medium	Compressed Air
Operating Temperature	-20 ... 80 °C
Port Size	G1-1/2
Actuation	Manual
Maximum Inlet Pressure	17 bar
Materials - Elastomers	Nitrile rubber
Range	T68C
Series	Olympian Plus
Brand	Norgren

T68C-8GB-B2N

Olympian 68 3/2 G1 Shut-off Valve

Overview Technical Details

3 port/2 position
Easy to operate
Lockable in the 'closed' position

Medium:	Compressed Air
Port Size:	G1
Actuation:	Manual

Downloads

CAD Installation Guide (PDF)

CAD

We offer CAD for the vast majority of our product range providing you with access to download 2D and 3D CAD models, quickly and easily in a wide range of file formats and versions.

CAD & CONFIGURATION

Technical Details

Medium	Compressed Air
Operating Temperature	-20 ... 80 °C
Port Size	G1
Actuation	Manual
Maximum Inlet Pressure	17 bar
Materials - Elastomers	Nitrile rubber
Certification - WEEE	NonWEEE
Classification - eClass 11	51030200
Range	T68C
Series	Olympian Plus
Brand	Norgren

Алматы (7273)495-231
Ангарск (3955)60-70-56
Архангельск (8182)63-90-72
Астрахань (8512)99-46-04
Барнаул (3852)73-04-60
Белгород (4722)40-23-64
Благовещенск (4162)22-76-07
Брянск (4832)59-03-52
Владивосток (423)249-28-31
Владикавказ (8672)28-90-48
Владимир (4922)49-43-18
Волгоград (844)278-03-48
Вологда (8172)26-41-59
Воронеж (473)204-51-73
Екатеринбург (343)384-55-89
Иваново (4932)77-34-06
Ижевск (3412)26-03-58
Иркутск (395)279-98-46
Казань (843)206-01-48
Калининград (4012)72-03-81
Калуга (4842)92-23-67
Кемерово (3842)65-04-62
Киров (8332)68-02-04
Коломна (4966)23-41-49
Кострома (4942)77-07-48
Краснодар (861)203-40-90
Красноярск (391)204-63-61
Курск (4712)77-13-04
Курган (3522)50-90-47
Липецк (4742)52-20-81
Магнитогорск (3519)55-03-13
Москва (495)268-04-70
Мурманск (8152)59-64-93
Набережные Челны (8552)20-53-41
Нижний Новгород (831)429-08-12
Новокузнецк (3843)20-46-81
Ноябрьск (3496)41-32-12
Новосибирск (383)227-86-73
Омск (3812)21-46-40
Орел (4862)44-53-42
Оренбург (3532)37-68-04
Пенза (8412)22-31-16
Петрозаводск (8142)55-98-37
Псков (8112)59-10-37
Пермь (342)205-81-47
Ростов-на-Дону (863)308-18-15
Рязань (4912)46-61-64
Самара (846)206-03-16
Саранск (8342)22-96-24
Санкт-Петербург (812)309-46-40
Саратов (845)249-38-78
Севастополь (8692)22-31-93
Симферополь (3652)67-13-56
Смоленск (4812)29-41-54
Сочи (862)225-72-31
Ставрополь (8652)20-65-13
Сургут (3462)77-98-35
Сыктывкар (8212)25-95-17
Тамбов (4752)50-40-97
Тверь (4822)63-31-35
Тольятти (8482)63-91-07
Томск (3822)98-41-53
Тула (4872)33-79-87
Тюмень (3452)66-21-18
Ульяновск (8422)24-23-59
Улан-Удэ (3012)59-97-51
Уфа (347)229-48-12
Хабаровск (4212)92-98-04
Чебоксары (8352)28-53-07
Челябинск (351)202-03-61
Череповец (8202)49-02-64
Чита (3022)38-34-83
Якутск (4112)23-90-97
Ярославль (4852)69-52-93

Россия +7(495)268-04-70
Казахстан +7(7172)727-132
Киргизия +996(312)96-26-47

www.norgren.nt-rt.ru || ner@nt-rt.ru